TRUEFORM CONCRETE + HEARTHCABINET / CONCRETE FIREPLACE SURROUNDS / 2023

TRUEFORM CONCRETE + HEARTHCABINET / CONCRETE FIREPLACE SURROUNDS / 2023

TERO

LANA

PLANO

Trueform concrete

COLORS

No material is quite like concrete. Artisanal and hand-worked, concrete presents a natural, aesthetic finish with subtle gradations that elicit a feeling of depth and solidity that few other surfaces can achieve. Trueform Concrete's standard concrete color palette is displayed below. Peaceful and muted, these eight colors were selected to be compatible with myriad color schemes. Each color is available in three distinct finishes.

CLASSIC FINISH

Our most popular finish, Classic is the ideal choice. While visually warm and smooth, it is the most uniform of our finishes. Visible are fine sand particles and soft, subtle gradations in color. The surface is coated with a topical sealer for optimum protection.

Custom colors are also available. Please inquire at 888.474.7977 or makers@trueformconcrete.com.

FOUNDRY FINISH

Using a unique casting techique, a naturally mottled and varied effect can be achieved with our Foundry finish. Here, each piece tells its own unique story. The surface has a bit of a texture, giving it a hand-troweled feel. The surface is coated with a topical sealer for optimum protection.

Custom colors are also available. Please inquire at 888.474.7977 or makers@trueformconcrete.com.

INDUSTRIAL FINISH

Raw and untamed, this finish is popular for those seeking a more distressed aesthetic. Visible are unfilled pores and openings resulting from trapped air. The surface is coated with a topical sealer for optimum protection.

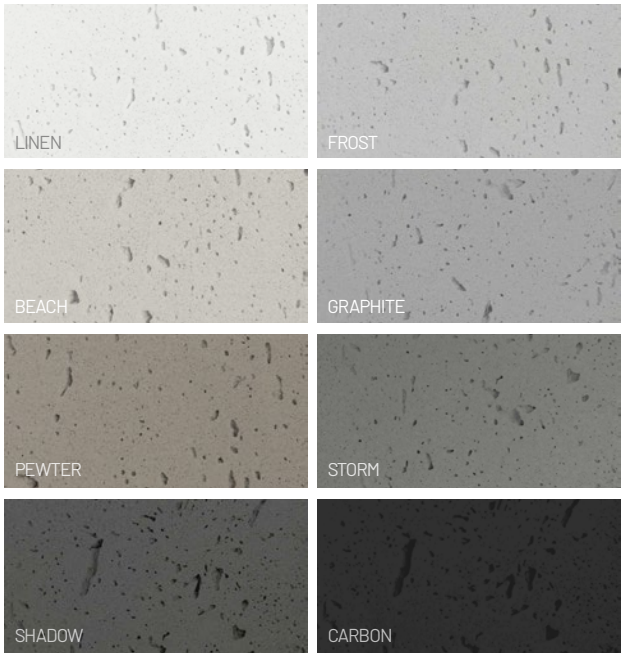

Custom colors are also available. Please inquire at 888.474.7977 or makers@trueformconcrete.com.

TERO

TERO

Model: FP-TERO-TALL
Fits Hearth Cabinet models 102, 202, 303 & 304

OVERVIEW

Designed to fit exclusively with Hearth Cabinet "Tall" ventless fireplaces, TERO is a concrete surround solution that transitions between contemporary and classic styles and features a 3-tiered facade that steps gracefully toward the firebox.

SPECIFICATIONS

2-part system: The **Surround** is a single, seamless concrete piece. Concrete is 3/4" thick throughout.
The **Hearth** is a separate, 1.5" thick solid concrete slab.
Handmade in the USA by Trueform Concrete, LLC.

DIMENSIONS & WEIGHT

Surround: 40" H x 60" L x 14" Deep / weight: ~174 lbs
Hearth: 1.5" H x 62" L x 15" Deep / weight: ~91 lbs

CUSTOMIZATION

Hearth thickness/dimensions can be modified to suit.
Inquire for more details at 888.474.7977.

PRICE

Classic: $4,550 (curbside delivery) / $4,850 (in-home delivery)
Foundry: $5,005 (curbside delivery) / $5,305 (in-home delivery)
Industrial: $5,460 (curbside delivery) / $5,760 (in-home delivery)
Optional Cap starting at $500 (see page 30).
Firebox sold separately.

TERO

Model: FP-TERO-TALL
Fits Hearth Cabinet models 102, 202, 303 & 304

Dimensions as shown are of the surround for a **flush** HearthCabinet installation (i.e. with a mounting depth of 12") and not the firebox itself. A "tolerance" gap of 1/8" will exist between the firebox and the surround. **Proud** installation is also available. Please contact Trueform Concrete at 888-474-7977 if you are seeking proud installation.

For dimensions of HearthBrand fireboxes, please refer to the individual specifications.

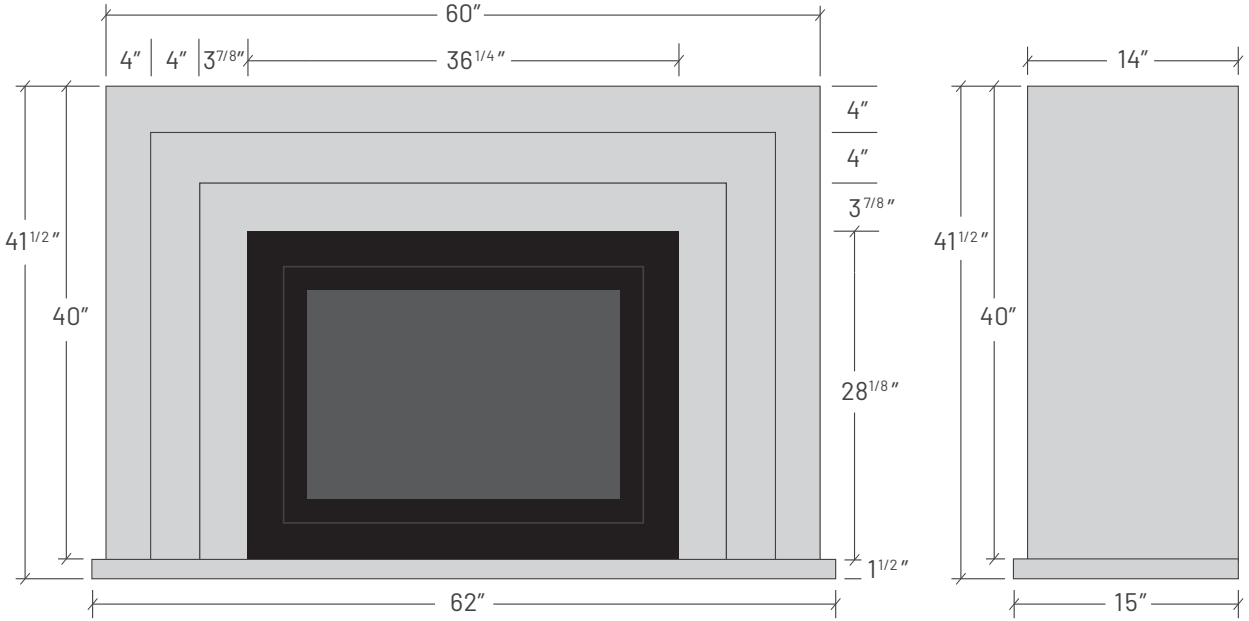

TERO

Model: FP-TERO-SQUARE
Fits Hearth Cabinet models 401, 402 & 403

OVERVIEW

Designed to fit exclusively with Hearth Cabinet "Square" ventless fireplaces, TERO is a concrete surround solution transitions between contemporary and classic styles and features a 3-tiered facade that steps gracefully toward the firebox.

SPECIFICATIONS

2-part system: The **Surround** is a single, seamless concrete piece. Concrete is 3/4" thick throughout.
The **Hearth** is a separate, 1.5" thick solid concrete slab.
Handmade in the USA by Trueform Concrete, LLC.

DIMENSIONS & WEIGHT

Surround: 40" H x 60" L x 14" Deep / weight: ~182 lbs
Hearth: 1.5" H x 62" L x 15" Deep / weight: ~91 lbs

CUSTOMIZATION

Hearth thickness/dimensions can be modified to suit.
Inquire for more details at 888.474.7977.

PRICE

Classic: $4,550 (curbside delivery) / $4,850 (in-home delivery)
Foundry: $5,005 (curbside delivery) / $5,305 (in-home delivery)
Industrial: $5,460 (curbside delivery) / $5,760 (in-home delivery)
Optional Cap starting at $500 (see page 30).
Firebox sold separately.

TERO

Model: FP-TERO-SQUARE
Fits Hearth Cabinet models 401, 402 & 403

Dimensions as shown are of the surround for a **flush** HearthCabinet installation (i.e. with a mounting depth of 12") and not the firebox itself. A "tolerance" gap of 1/8" will exist between the firebox and the surround. **Proud** installation is also available. Please contact Trueform Concrete at 888-474-7977 if you are seeking proud installation.

For dimensions of HearthBrand fireboxes, please refer to the individual specifications.

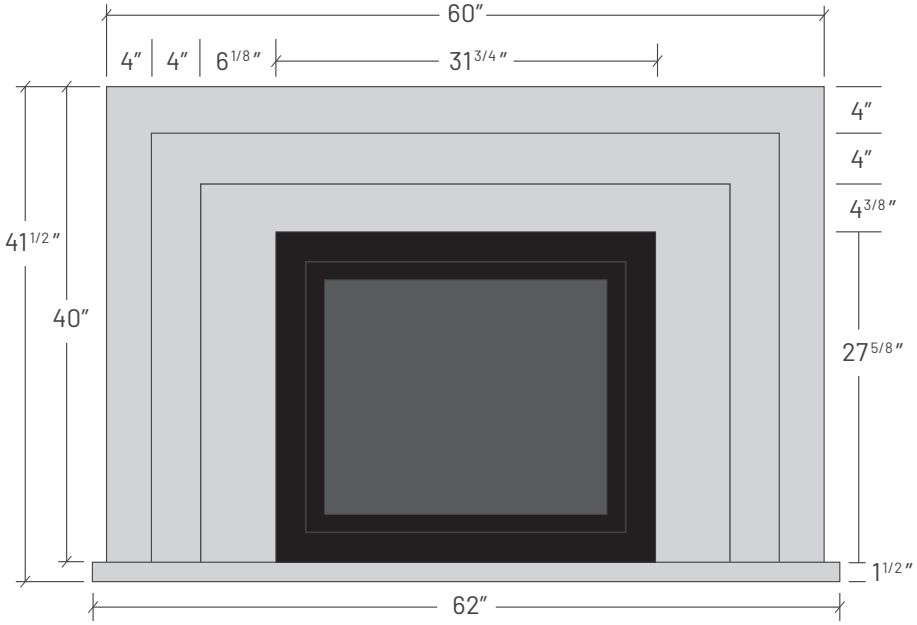

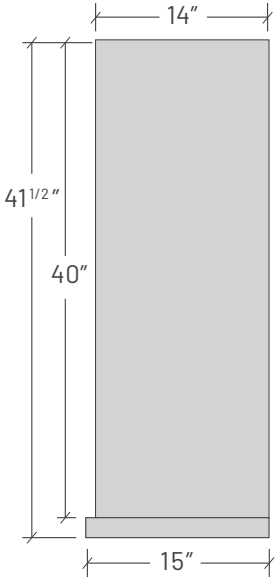

TERO

Model: FP-TERO-LINEAR
Fits Hearth Cabinet models 201, 301 & 302

OVERVIEW

Designed to fit exclusively with Hearth Cabinet "Linear" ventless fireplaces, TERO is a concrete surround solution that transitions etween contemporary and classic styles and features a 3-tiered facade that steps gracefully toward the firebox.

SPECIFICATIONS

3-part system: The **Surround** is a single, seamless concrete piece. Concrete is 3/4" thick throughout.
The **Hearth** is a separate, 1.5" thick solid concrete slab.
A **Platform** is included for lifting the fireplace off of the hearth.
Handmade in the USA by Trueform Concrete, LLC.

DIMENSIONS & WEIGHT

Surround: 40" H x 60" L x 14" Deep / weight: ~182 lbs
Hearth: 1.5" H x 62" L x 15" Deep / weight: ~91 lbs

CUSTOMIZATION

Hearth thickness/dimensions can be modified to suit.
Inquire for more details at 888.474.7977.

PRICE

Classic: $4,800 (curbside delivery) / $5,100 (in-home delivery)
Foundry: $5,280 (curbside delivery) / $5,580 (in-home delivery)
Industrial: $5,760 (curbside delivery) / $6,060 (in-home delivery)
Optional Cap starting at $500 (see page 30).
Firebox sold separately.

TERO

Model: FP-TERO-LINEAR
Fits Hearth Cabinet models 201, 301 & 302

Dimensions as shown are of the surround for a **flush** HearthCabinet installation (i.e. with a mounting depth of 12") and not the firebox itself. A "tolerance" gap of 1/8" will exist between the firebox and the surround. **Proud** installation is also available. Please contact Trueform Concrete at 888-474-7977 if you are seeking proud installation.

For dimensions of HearthBrand fireboxes, please refer to the individual specifications.

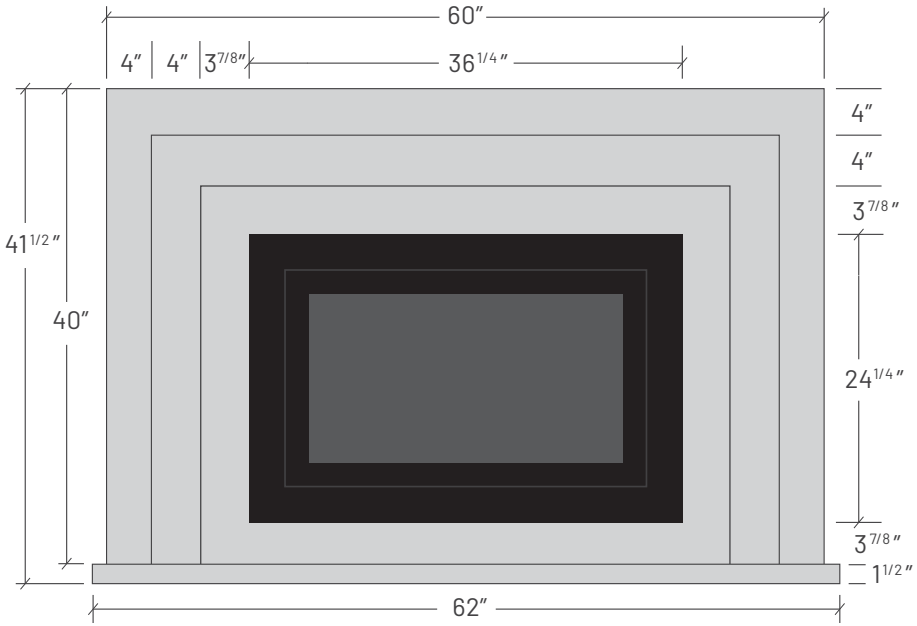

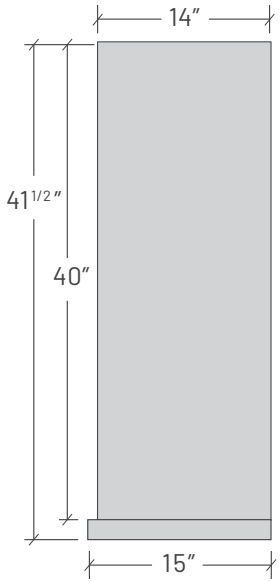

TERO

Model: FP-TERO-SMALL
Fits Hearth Cabinet models 101, 103, 111 & 121

OVERVIEW

Designed to fit exclusively with Hearth Cabinet "Small" ventless fireplaces, TERO is a concrete surround solution that transitions between contemporary and classic styles and features a 3-tiered facade that steps gracefully toward the firebox.

SPECIFICATIONS

2-part system: The **Surround** is a single, seamless concrete piece. Concrete is 3/4" thick throughout.
The **Hearth** is a separate, 1.5" thick solid concrete slab.
Handmade in the USA by Trueform Concrete, LLC.

DIMENSIONS & WEIGHT

Surround: 40" H x 60" L x 14" Deep / weight: ~185 lbs
Hearth: 1.5" H x 62" L x 15" Deep / weight: ~91 lbs

CUSTOMIZATION

Hearth thickness/dimensions can be modified to suit.
Inquire for more details at 888.474.7977.

PRICE

Classic: $4,550 (curbside delivery) / $4,850 (in-home delivery)
Foundry: $5,005 (curbside delivery) / $5,305 (in-home delivery)
Industrial: $5,460 (curbside delivery) / $5,760 (in-home delivery)
Optional Cap starting at $500 (see page 30).
Firebox sold separately.

TERO

Model: FP-TERO-SMALL
Fits Hearth Cabinet models 101, 103, 111 & 121

Dimensions as shown are of the surround for a **flush** HearthCabinet installation (i.e. with a mounting depth of 12") and not the firebox itself. A "tolerance" gap of 1/8" will exist between the firebox and the surround. **Proud** installation is also available. Please contact Trueform Concrete at 888-474-7977 if you are seeking proud installation.

For dimensions of HearthBrand fireboxes, please refer to the individual specifications.

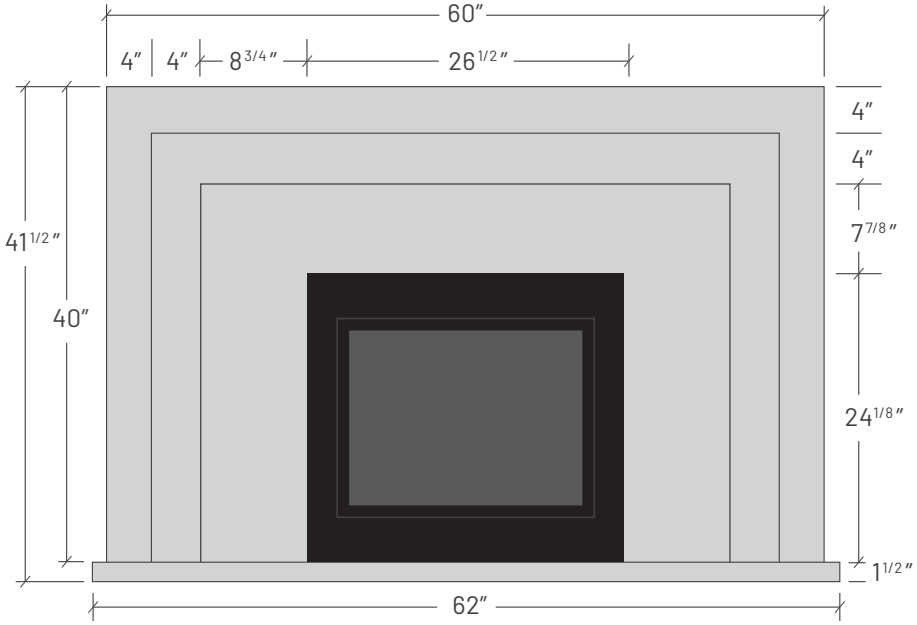

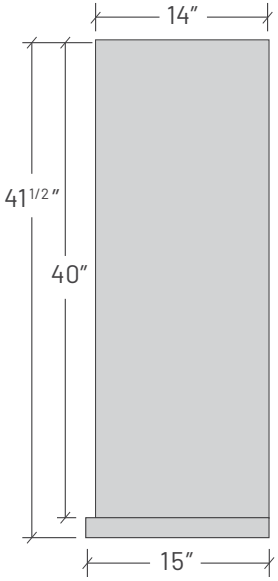

LANA

LANA

Model: FP-LANA-TALL
Fits Hearth Cabinet models 102, 202, 303 & 304

OVERVIEW
Designed to fit exclusively with Hearth Cabinet "Tall" ventless fireplaces, LANA is a concrete surround solution that balances contemporary and classic styles and features a beveled facade that pitches toward the firebox.

SPECIFICATIONS
2-part system: The **Surround** is single, seamless concrete piece
Concrete is 3/4" thick throughout.
The **Hearth** is a separate, 1.5" thick solid concrete slab.
Handmade in the USA by Trueform Concrete, LLC.

DIMENSIONS & WEIGHT
Surround: 40" H x 60" L x 15" Deep / weight: ~176 lbs
Hearth: 1.5" H x 62" L x 16" Deep / weight: ~91 lbs

CUSTOMIZATION
Hearth thickness/dimensions can be modified to suit.
Inquire for more details at 888.474.7977.

PRICE
Classic: $4,750 (curbside delivery) / $5,050 (in-home delivery)
Foundry: $5,225 (curbside delivery) / $5,525 (in-home delivery)
Industrial: $5,700 (curbside delivery) / $6,000 (in-home delivery)
Optional Cap starting at $500 (see page 30).
Firebox sold separately.

LANA

Model: FP-LANA-TALL
Fits Hearth Cabinet models 102, 202, 303 & 304

Dimensions as shown are of the surround for a **flush** HearthCabinet installation (i.e. with a mounting depth of 12") and not the firebox itself. A "tolerance" gap of 1/8" will exist between the firebox and the surround. **Proud** installation is also available. Please contact Trueform Concrete at 888-474-7977 if you are seeking proud installation.

For dimensions of HearthBrand fireboxes, please refer to the individual specifications.

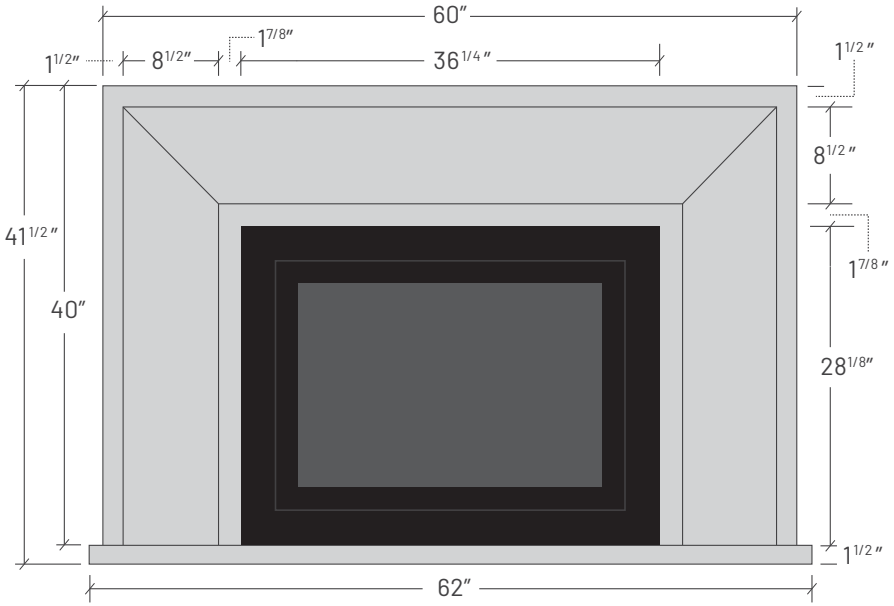

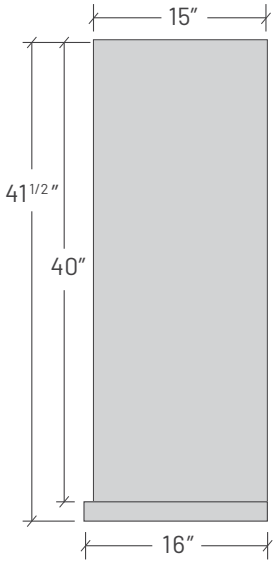

LANA

Model: FP-LANA-SQUARE
Fits Hearth Cabinet models 401, 402 & 403

OVERVIEW
Designed to fit exclusively with Hearth Cabinet "Square" ventless fireplaces, LANA is a concrete surround solution that balances contemporary and classic styles and features a beveled facade that pitches toward the firebox.

SPECIFICATIONS
2-part system: The **Surround** is single, seamless concrete piece.
Concrete is 3/4" thick throughout.
The **Hearth** is a separate, 1.5" thick solid concrete slab.
Handmade in the USA by Trueform Concrete, LLC.

DIMENSIONS & WEIGHT
Surround: 40" H x 60" L x 15" Deep / weight: ~183 lbs
Hearth: 1.5" H x 62" L x 16" Deep / weight: ~91 lbs

CUSTOMIZATION
Hearth thickness/dimensions can be modified to suit.
Inquire for more details at 888.474.7977.

PRICE
Classic: $4,750 (curbside delivery) / $5,050 (in-home delivery)
Foundry: $5,225 (curbside delivery) / $5,525 (in-home delivery)
Industrial: $5,700 (curbside delivery) / $6,000 (in-home delivery)
Optional Cap starting at $500 (see page 30).
Firebox sold separately.

LANA

Model: FP-LANA-SQUARE
Fits Hearth Cabinet models 401, 402 & 403

Dimensions as shown are of the surround for a **flush** HearthCabinet installation (i.e. with a mounting depth of 12") and not the firebox itself. A "tolerance" gap of 1/8" will exist between the firebox and the surround. **Proud** installation is also available. Please contact Trueform Concrete at 888-474-7977 if you are seeking proud installation.

For dimensions of HearthBrand fireboxes, please refer to the individual specifications.

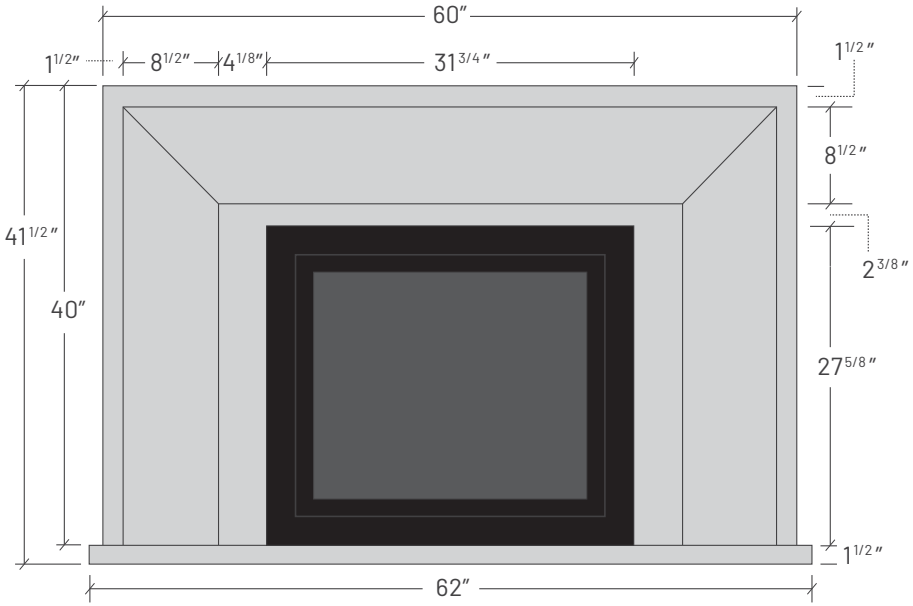

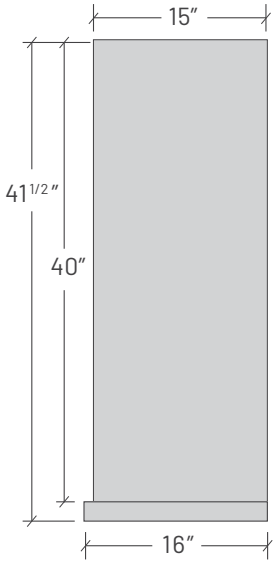

LANA

Model: FP-LANA-LINEAR
Fits Hearth Cabinet models 201, 301 & 302

OVERVIEW

Designed to fit exclusively with Hearth Cabinet "Linear" ventless fireplaces, LANA is a concrete surround solution that balances contemporary and classic styles and features a beveled facade that sweeps toward the firebox.

SPECIFICATIONS

3-part system: The **Surround** is a single, seamless concret piece. Concrete is 3/4" thick throughout.
The **Hearth** is a separate, 1.5" thick solid concrete slab.
A **Platform** is included for lifting the fireplace off the hearth.
Handmade in the USA by Trueform Concrete, LLC.

DIMENSIONS & WEIGHT

Surround: 40" H x 60" L x 15" Deep / weight: ~183 lbs
Hearth: 1.5" H x 62" L x 16" Deep / weight: ~91 lbs

CUSTOMIZATION

Hearth thickness/dimensions can be modified to suit.
Inquire for more details at 888.474.7977.

PRICE

Classic: $5,000 (curbside delivery) / $5,300 (in-home delivery)
Foundry: $5,500 (curbside delivery) / $5,800 (in-home delivery)
Industrial: $6,000 (curbside delivery) / $6,300 (in-home delivery)
Optional Cap starting at $500 (see page 30).
Firebox sold separately.

LANA

Model: FP-LANA-LINEAR
Fits Hearth Cabinet models 201, 301 & 302

Dimensions as shown are of the surround for a **flush** HearthCabinet installation (i.e. with a mounting depth of 12") and not the firebox itself. A "tolerance" gap of 1/8" will exist between the firebox and the surround. **Proud** installation is also available. Please contact Trueform Concrete at 888-474-7977 if you are seeking proud installation.

For dimensions of HearthBrand fireboxes, please refer to the individual specifications.

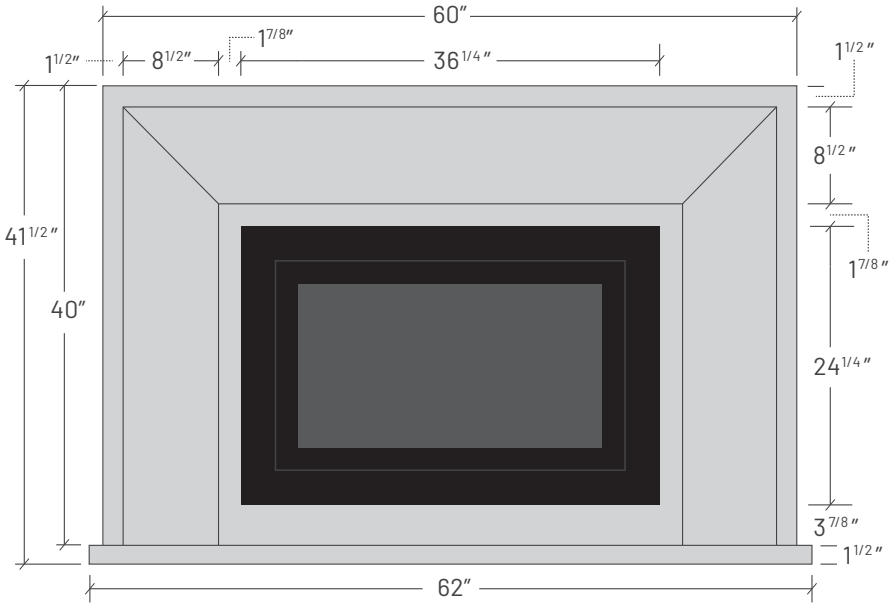

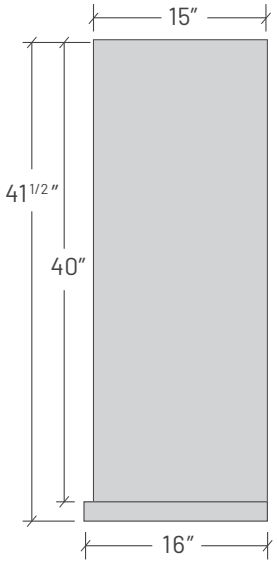

LANA

Model: FP-LANA-SMALL
Fits Hearth Cabinet models 101, 103, 111 & 121

OVERVIEW
Designed to fit exclusively with Hearth Cabinet "Small" ventless fireplaces, LANA is a concrete surround solution that balances contemporary and classic styles and features a beveled facade that sweeps toward the firebox.

SPECIFICATIONS
2-part system: The **Surround** is single, seamless concrete piece.
Concrete is 3/4" thick throughout.
The **Hearth** is a separate, 1.5" thick solid concrete slab.
Handmade in the USA by Trueform Concrete, LLC.

DIMENSIONS & WEIGHT
Surround: 40" H x 60" L x 15" Deep / weight: ~186 lbs
Hearth: 1.5" H x 62" L x 16" Deep / weight: ~91 lbs

CUSTOMIZATION
Hearth thickness/dimensions can be modified to suit.
Inquire for more details at 888.474.7977.

PRICE
Classic: $4,750 (curbside delivery) / $5,050 (in-home delivery)
Foundry: $5,225 (curbside delivery) / $5,525 (in-home delivery)
Industrial: $5,700 (curbside delivery) / $6,000 (in-home delivery)
Optional Cap starting at $500 (see page 30).
Firebox sold separately.

LANA

Model: FP-LANA-SMALL
Fits Hearth Cabinet models 101, 103, 111 & 121

Dimensions as shown are of the surround for a **flush** HearthCabinet installation (i.e. with a mounting depth of 12") and not the firebox itself. A "tolerance" gap of 1/8" will exist between the firebox and the surround. **Proud** installation is also available. Please contact Trueform Concrete at 888-474-7977 if you are seeking proud installation.

For dimensions of HearthBrand fireboxes, please refer to the individual specifications.

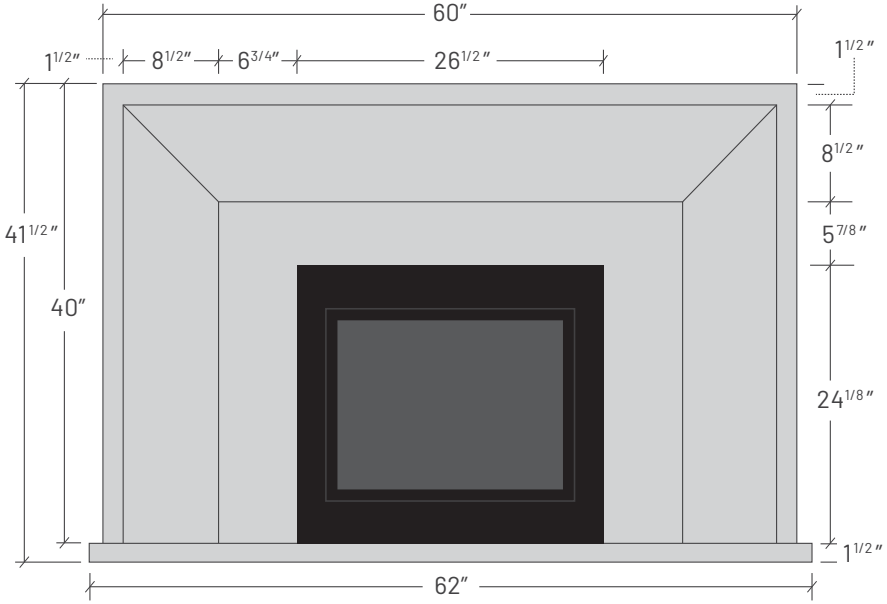

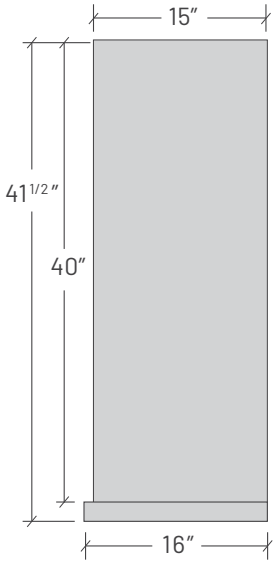

PLANO

PLANO

Model: FP-PLANO-TALL
Fits Hearth Cabinet models 102, 202, 303 & 304

OVERVIEW
Designed to fit exclusively with Hearth Cabinet "Tall" ventless fireplaces, PLANO is a concrete surround solution defined by clean lines and modern sensibility. It's minimalist, timeless simplicity blends seamlessly with myriad styles.

SPECIFICATIONS
2-part system: The **Surround** is single, seamless concrete piece. Concrete is 3/4" thick throughout.
The **Hearth** is a separate, 1.5" thick solid concrete slab.
Handmade in the USA by Trueform Concrete, LLC.

DIMENSIONS & WEIGHT
Surround: 40" H x 60" L x 15" Deep / weight: ~186 lbs
Hearth: 1.5" H x 62" L x 16" Deep / weight: ~91 lbs

CUSTOMIZATION
Hearth thickness/dimensions can be modified to suit.
Inquire for more details at 888.474.7977.

PRICE
Classic: $4,225 (curbside delivery) / $4,525 (in-home delivery)
Foundry: $4,650 (curbside delivery) / $4,950 (in-home delivery)
Industrial: $5,070 (curbside delivery) / $5,370 (in-home delivery)
Optional Cap starting at $500 (see page 30).
Firebox sold separately.

PLANO

Model: FP-PLANO-TALL
Fits Hearth Cabinet models 102, 202, 303 & 304

Dimensions as shown are of the surround for a **flush** HearthCabinet installation (i.e. with a mounting depth of 12") and not the firebox itself. A "tolerance" gap of 1/8" will exist between the firebox and the surround. **Proud** installation is also available. Please contact Trueform Concrete at 888-474-7977 if you are seeking proud installation.

For dimensions of HearthBrand fireboxes, please refer to the individual specifications.

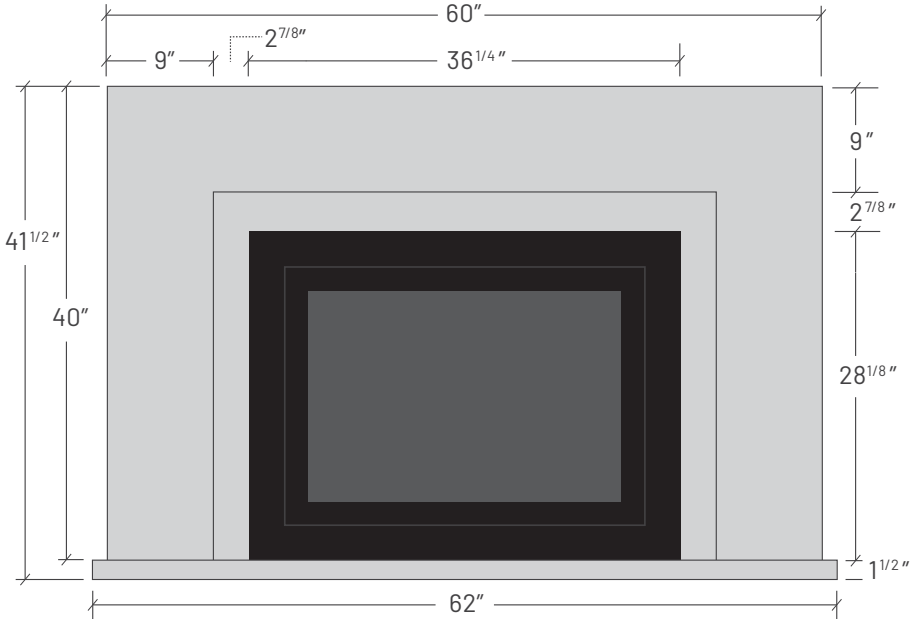

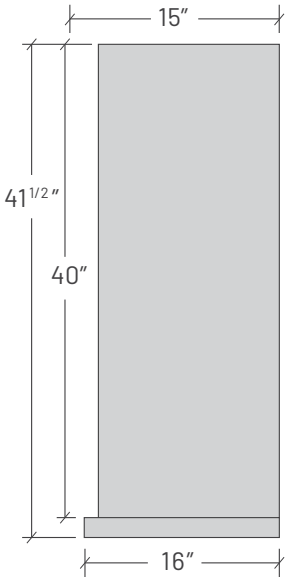

PLANO

Model: FP-PLANO-SQUARE
Fits Hearth Cabinet models 401, 402 & 403

OVERVIEW
Designed to fit exclusively with Hearth Cabinet "Tall" ventless fireplaces, PLANO is a concrete surround solution defined by clean lines and modern sensibility. It's minimalist, timeless simplicity blends seamlessly with myriad styles.

SPECIFICATIONS
2-part system: The **Surround** is single, seamless concrete piece.
Concrete is 3/4" thick throughout.
The **Hearth** is a separate, 1.5" thick solid concrete slab.
Handmade in the USA by Trueform Concrete, LLC.

DIMENSIONS & WEIGHT
Surround: 40" H x 60" L x 15" Deep / weight: ~194 lbs
Hearth: 1.5" H x 62" L x 16" Deep / weight: ~91 lbs

CUSTOMIZATION
Hearth thickness/dimensions can be modified to suit.
Inquire for more details at 888.474.7977.

PRICE
Classic: $4,225 (curbside delivery) / $4,525 (in-home delivery)
Foundry: $4,650 (curbside delivery) / $4,950 (in-home delivery)
Industrial: $5,070 (curbside delivery) / $5,370 (in-home delivery)
Optional Cap starting at $500 (see page 30).
Firebox sold separately.

PLANO

Model: FP-PLANO-SQUARE
Fits Hearth Cabinet models 401, 402 & 403

Dimensions as shown are of the surround for a **flush** HearthCabinet installation (i.e. with a mounting depth of 12") and not the firebox itself. A "tolerance" gap of 1/8" will exist between the firebox and the surround. **Proud** installation is also available. Please contact Trueform Concrete at 888-474-7977 if you are seeking proud installation.

For dimensions of HearthBrand fireboxes, please refer to the individual specifications.

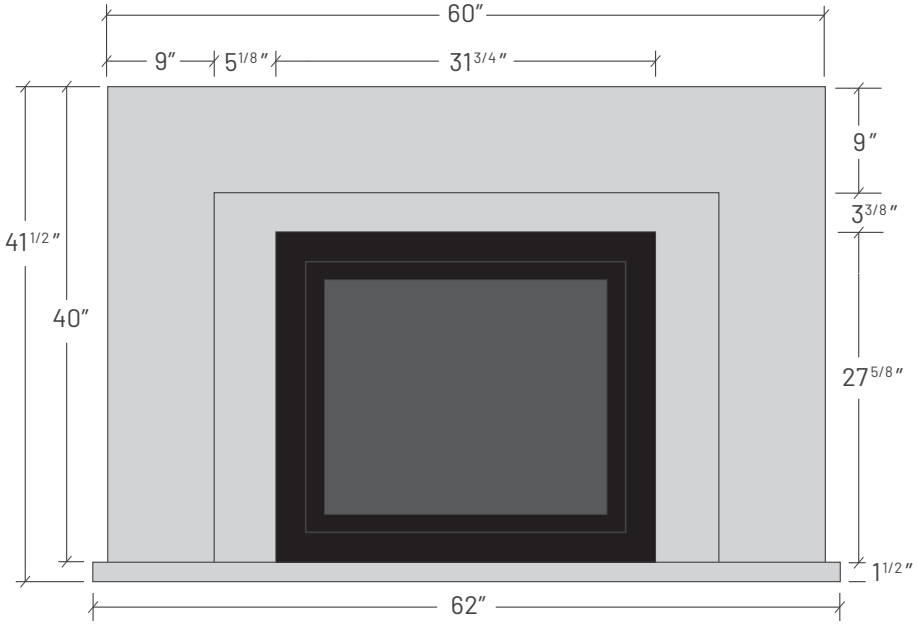

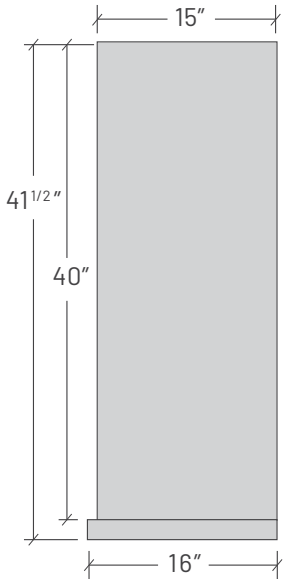

PLANO

Model: FP-PLANO-LINEAR
Fits Hearth Cabinet models 201, 301 & 302

OVERVIEW

Designed to fit exclusively with Hearth Cabinet "Linear" ventless fireplaces, PLANO is a concrete surround solution defined by clean lines and modern sensibility. It's minimalist, timeless simplicity blends seamlessly with myriad styles.

SPECIFICATIONS

3-part system: The **Surround** is a single, seamless concrete piece. Concrete is 3/4" thick throughout.
The **Hearth** is a separate, 1.5" thick solid concrete slab.
A **Platform** is included for lifting the fireplace off the hearth.
Handmade in the USA by Trueform Concrete, LLC.

DIMENSIONS & WEIGHT

Surround: 40" H x 60" L x 15" Deep / weight: ~194 lbs
Hearth: 1.5" H x 62" L x 16" Deep / weight: ~91 lbs

CUSTOMIZATION

Hearth thickness/dimensions can be modified to suit.
Inquire for more details at 888.474.7977.

PRICE

Classic: $4,475 (curbside delivery) / $4,775 (in-home delivery)
Foundry: $4,925 (curbside delivery) / $5,250 (in-home delivery)
Industrial: $5,370 (curbside delivery) / $5,670 (in-home delivery)
Optional Cap starting at $500 (see page 30).
Firebox sold separately.

PLANO

Model: FP-PLANO-LINEAR
Fits Hearth Cabinet models 201, 301 & 302

Dimensions as shown are of the surround for a **flush** HearthCabinet installation (i.e. with a mounting depth of 12") and not the firebox itself. A "tolerance" gap of 1/8" will exist between the firebox and the surround. **Proud** installation is also available. Please contact Trueform Concrete at 888-474-7977 if you are seeking proud installation.

For dimensions of HearthBrand fireboxes, please refer to the individual specifications.

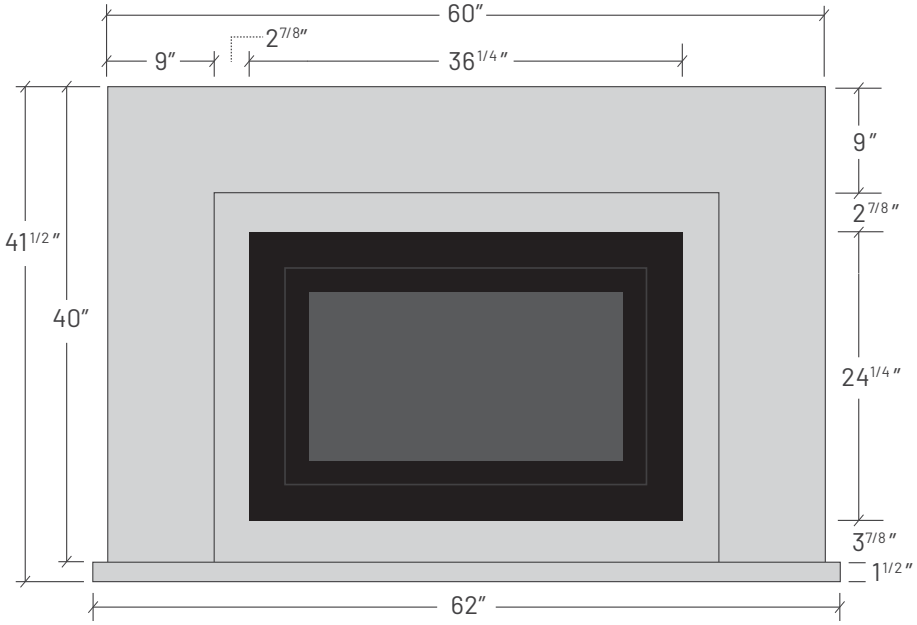

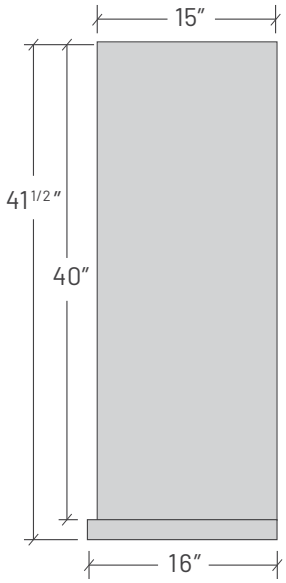

PLANO

Model: FP-PLANO-SMALL
Fits Hearth Cabinet models 101, 103, 111 & 121

OVERVIEW
Designed to fit exclusively with Hearth Cabinet "Square" ventless fireplaces, PLANO is a concrete surround solution defined by clean lines and modern sensibility. It's minimalist, timeless simplicity blends seamlessly with myriad styles.

SPECIFICATIONS
2-part system: The **Surround** is single, seamless concrete piece.
Concrete is 3/4" thick throughout.
The **Hearth** is a separate, 1.5" thick solid concrete slab.
Handmade in the USA by Trueform Concrete, LLC.

DIMENSIONS & WEIGHT
Surround: 40" H x 60" L x 15" Deep / weight: ~206 lbs
Hearth: 1.5" H x 62" L x 16" Deep / weight: ~91 lbs

CUSTOMIZATION
Hearth thickness/dimensions can be modified to suit.
Inquire for more details at 888.474.7977.

PRICE
Classic: $4,225 (curbside delivery) / $4,525 (in-home delivery)
Foundry: $4,650 (curbside delivery) / $4,950 (in-home delivery)
Industrial: $5,070 (curbside delivery) / $5,370 (in-home delivery)
Optional Cap starting at $500 (see page 30).
Firebox sold separately.

PLANO

Model: FP- PLANO-SMALL
Fits Hearth Cabinet models 101, 103, 111 & 121

Dimensions as shown are of the surround for a **flush** HearthCabinet installation (i.e. with a mounting depth of 12") and not the firebox itself. A "tolerance" gap of 1/8" will exist between the firebox and the surround. **Proud** installation is also available. Please contact Trueform Concrete at 888-474-7977 if you are seeking proud installation.

For dimensions of HearthBrand fireboxes, please refer to the individual specifications.

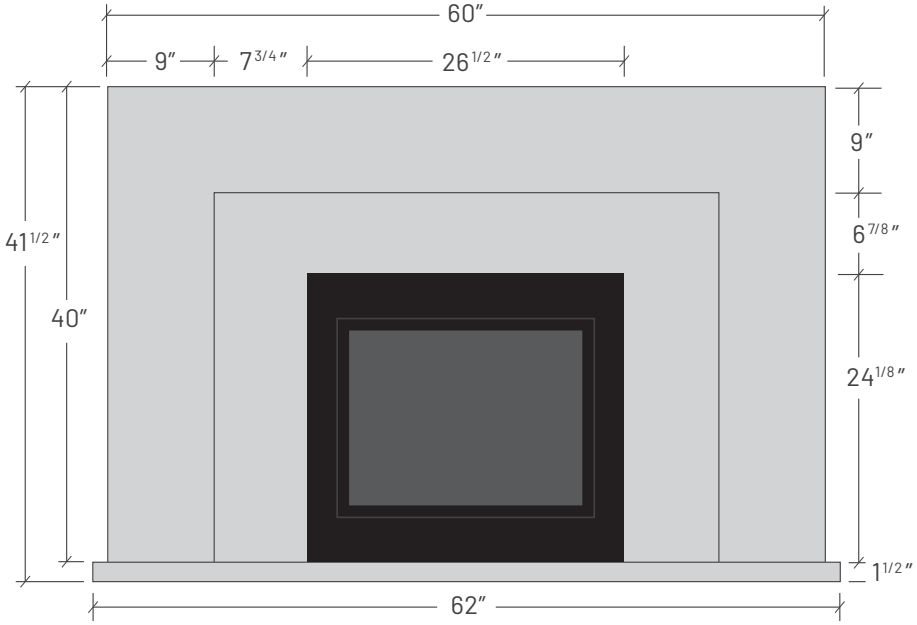

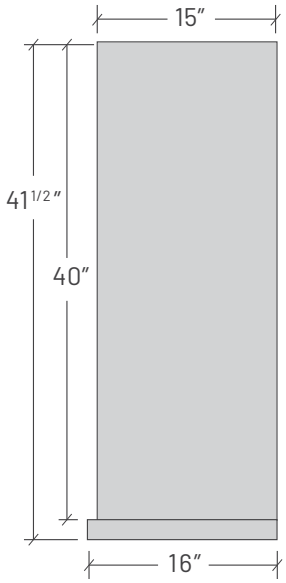

CONCRETE CAP

Optional for each model is a 0.75″ concrete cap that sits atop the surround. These caps can be made either in the same color or in a complimentary color of your choosing. Caps overhang the left, right and front edges of the surround by 0.25″.

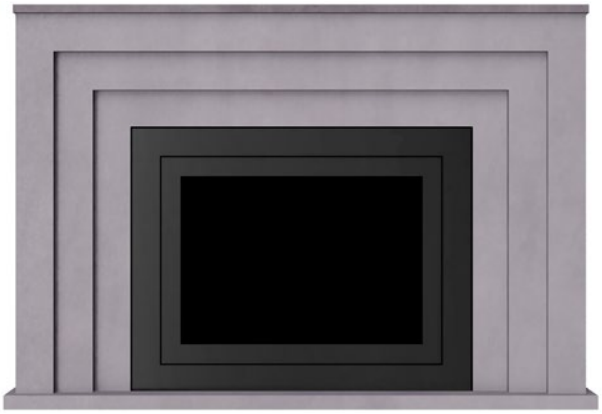

TERO surround (color: graphite) with optional cap (color: charcoal)

Dimensions: 60.5″ x 14.25″ x 0.75″
Overhang: 0.25″ on left, front, and right sides
Weight: ~45 lbs

Cost
Classic Finish: $500.00
Foundry Finish: $550.00
Industrial Finish: $600.00

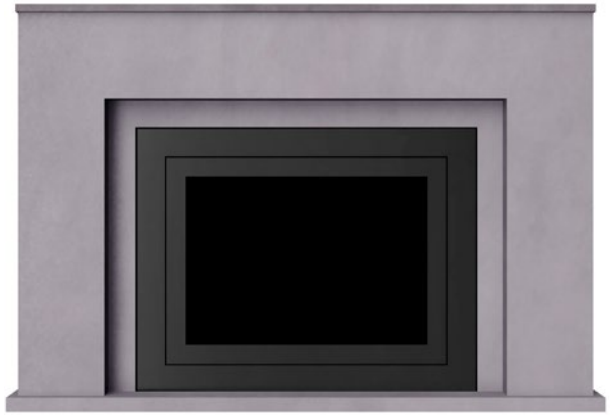

PLANO surround (color: graphite) with optional cap (color: charcoal)

Dimensions: 60.5″ x 15.25″ x 0.75″
Overhang: 0.25″ on left, front, and right sides
Weight: ~48 lbs

Cost
Classic Finish: $500.00
Foundry Finish: $550.00
Industrial Finish: $600.00

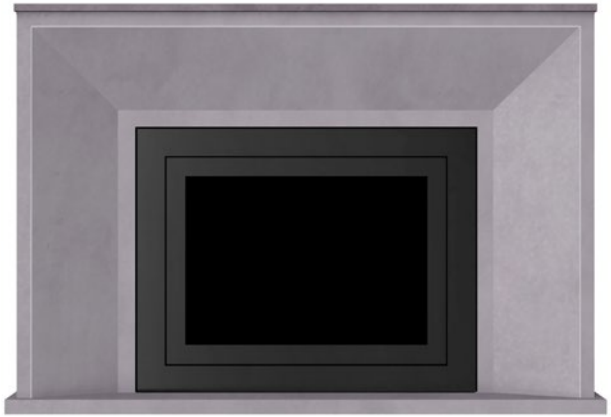

LANA surround (color: graphite) with optional cap (color: charcoal)

Dimensions: 60.5″ x 15.25″ x 0.75″
Overhang: 0.25″ on left, front, and right sides
Weight: ~48 lbs

Cost
Classic Finish: $500.00
Foundry Finish: $550.00
Industrial Finish: $600.00

INSTALLATION

For **TALL** (models 201, 202, 303, 304) | **SQUARE** (models 401, 402 & 403) | **SMALL** (models 101, 103, 111 & 121)

Overview

Our concrete systems were designed with the assumption that the intended space was built soundly. However, as walls and floors may not be perfectly straight, the installer might need to made adjustments in the environment in order to achieve a seamless look. Note that these pieces are quite heavy - so ideally this surround should be set by an experienced installation team of at least 2 people.

Materials Provided

- Four 1.5" pan head screws
- Felt strips

Tools Required

- Square
- Pencil
- Silicone
- Measuring tape
- Power drill
- 1/8" drill bit
- Trim molding, if applicable (quarter-round, etc.)

1. Set the Hearth

The hearth provides a platform upon which both the surround and the fireplace can sit evenly. **This means the hearth must be perfectly level - regardless of whether the floor is level or not.**

Place the hearth in the intended location and check for level in both directions. If the hearth wobbles or is not level, it means the floor is uneven. In this case, shim the hearth accordingly until it is level both in terms of length and depth* and does not wobble in any way.

Similarly, if the rear wall is not be straight due to dips or curvature, do your best to position the hearth so that the edges protrude from the wall at right angles - using the square to check.

Once the hearth is level in both directions, lift it high enough to apply a few dabs of silicone underneath and then lower it down slowly, ensuring any shims remain undisturbed.

**If leveling the hearth creates gaps in the floor, this can be addressed either by caulking or by adding molding trim (quarter-round, etc.) once the whole system is installed.*

INSTALLATION

For **TALL** (models 201, 202, 303, 304) | **SQUARE** (models 401, 402 & 403) | **SMALL** (models 101, 103, 111 & 121)

2. Set the surround

On the top surface of the hearth, use a pencil to mark a line that is 1" in from both the left and right edges. These lines indicate the position of the surround (the hearth is 1" wider on either side).

On the rear (wall-facing) edge of the surround, apply small dabs of silicone every ~6 inches. Once the silicon is applied, gently lift the surround into place on the hearth and push slowly against the wall – ensuring that the edges of the surround align with the lines you drew. Verify that the surround is both level both vertically and horizontally, and shim as necessary.

SURROUND MUST BE CENTERED OVER THE HEARTH

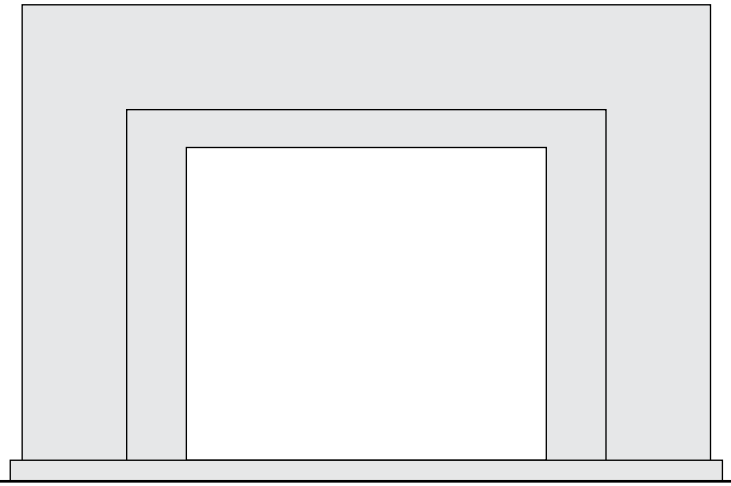

3. Insert the firebox

Tilt the firebox onto its side and apply the felt strips (provided) to the bottom surfaces of the unit, distributing it on corners and middle sections (this helps to prevent the firebox from scratching the hearth). Position the firebox in front of the surround opening and gently guide it in. Avoid dragging it as much as possible. In its final location, the front face of the firebox should be flush with the surface of the surround, and centered in the cutout, with a 1/8" gap around the perimeter. If for any reason the firebox is not plumb with the surround, shim the underside until the surfaces align. If the rear of the firebox needs to be shimmed, you will need to pull it out until the rear corners are exposed.

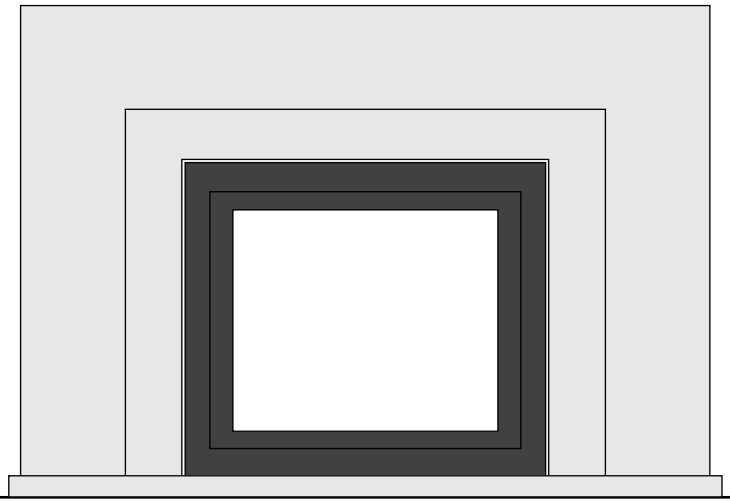

Note: You may want to cover any exposed areas of the hearth with Contractor's or Builder's Paper in order to protect the surface.

INSTALLATION

For **TALL** (models 201, 202, 303, 304) | **SQUARE** (models 401, 402 & 403) | **SMALL** (models 101, 103, 111 & 121)

4. Set the firebox

Note: To facilitate the installation process, a PVC sheet has been embedded in the hearth to enable screws to be driven in easier.

Once firebox is in its proper location, it will need to be secured to the hearth. Locate the 4 fastening holes in the bottom pan of the firebox. Using a 1/8" bit, drill a pilot hole into the hearth through each of the fastening holes, and drive each of the panhead screws (provided) into the hearth until they are snug against the pan.

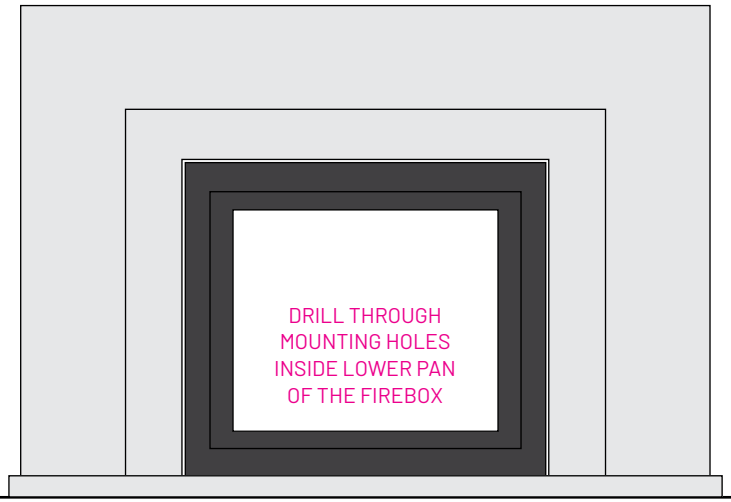

5. Completion

Clean up any pencil lines with a damp towel or rag.

It is common for walls or floors to be uneven. If this is the case, it will show up as gaps between the surround and the wall or between the hearth and floor. Should these gaps be visible, a more seamless appearance can be achieved by either applying caulk or adding trim molding of your choice (e.g., quarter-round). This will depend on the size and visibility of any gaps and is up to the discretion of the installer.

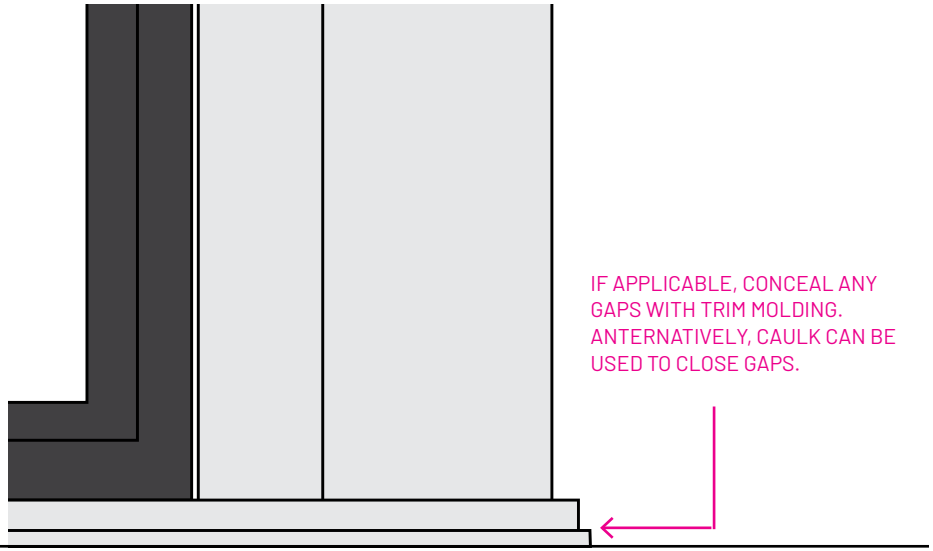

INSTALLATION

For **LINEAR** Fireplaces (models 201, 301 & 302)

Overview

Our concrete systems were designed with the assumption that the intended space was built soundly. However, as walls and floors may not be perfectly straight, the installer might need to made adjustments in the environment in order to achieve a seamless look. Note that these pieces are quite heavy - so ideally this surround should be set by an experienced installation team of at least 2 people.

Materials Provided

- Wood platform
- Four 1.5" pan head screws
- Two 0.5" wood screws

Tools Required

- Square
- Pencil
- Silicone
- Measuring tape
- Power drill
- 1/8" drill bit
- Trim molding, if applicable (quarter-round, etc.)

1. Set the Hearth

The hearth provides a platform upon which both the surround and the fireplace can sit evenly. **This means the hearth must be perfectly level - regardless of whether the floor is level or not.**

Place the hearth in the intended location and check for level in both directions. If the hearth wobbles or is not level, it means the floor is uneven. In this case, shim the hearth accordingly until it is level both in terms of length and depth and does not wobble in any way*.

Similarly, if the rear wall is not be straight due to dips or curvature, do your best to position the hearth so that the edges protrude from the wall at right angles - using the square to check.

Once the hearth is level in both directions, lift it high enough to apply a few dabs of silicone underneath and then lower it down slowly, ensuring any shims remain undisturbed.

**If leveling the hearth creates gaps in the floor, this can be addressed either by caulking or by adding molding trim (quarter-round, etc.) once the whole system is installed.*

INSTALLATION

For **LINEAR** Fireplaces (models 201, 301 & 302)

2. Position the platform

The Liner/Rectangular model must be raised above the hearth in order to fit correctly into the surround cutout. A hollow wood platform is included in the kit to accommodate this. Once installed, it will not be visible.

Place the platform (provided) against the wall of the hearth, centered between the left and right edges. The top of the platform has a circle cut into it so it can be lifted. Ensure that the side with the L-brackets is facing the wall.

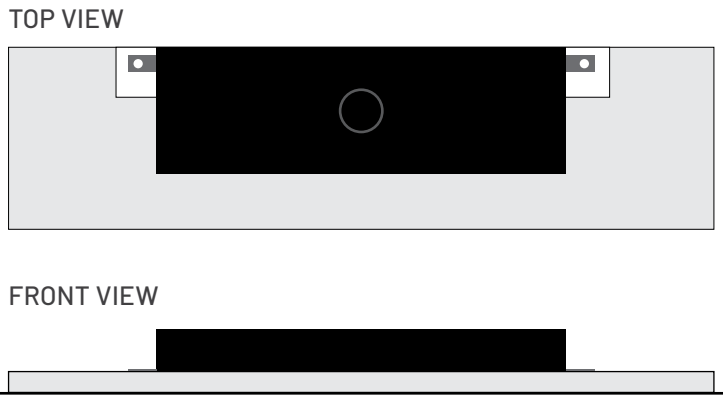

3. Set the surround

On the top surface of the hearth, use a pencil to mark a line that is 1" in from both the left and right edges. These lines indicate the edges of the surround (the hearth is 1" wider on either side).

On the rear (wall-facing) edge of the surround, apply small dabs of silicone every ~6 inches. Once the silicon is applied, gently lift the surround into position on the hearth and push slowly against the wall – ensuring that the edges of the surround align with the lines you drew. Verify that the surround is level both vertically and horizontally, and shim as necessary.

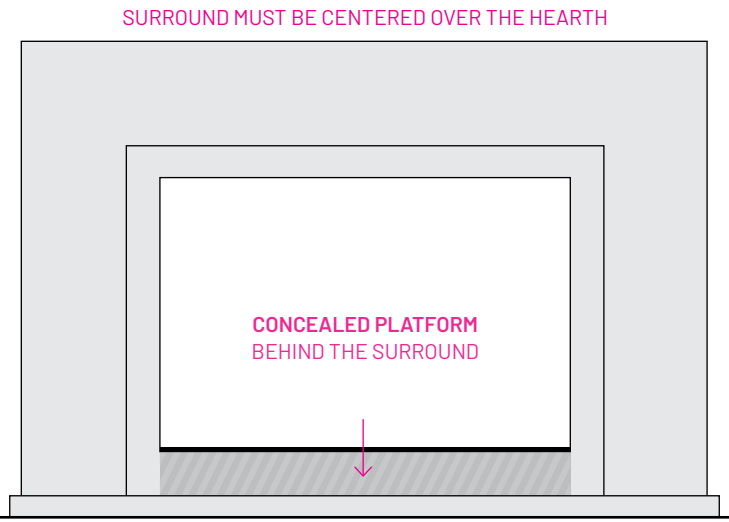

INSTALLATION

For **LINEAR** Fireplaces (models 201, 301 & 302)

4. Secure the platform

The platform must now be secured to the hearth. Pull it up to meet the front of the surround and center it in the surround cutout. **Note that the top surface of the platform should be 1/8" higher than the top surface of the surround cutout.**

Locate the L-brackets on either side of the rear of the platform. Using a 1/8" drill bit, drill a pilot hole through each bracket hole into the PVC. Drive a 0.5" wood screw through each hole to secure the platform. Do **not** use longer screws as this my separate the PVC from the concrete. *NOTE: Alternatively, you can set the platform by applying dabs of silicone its bottom edge, lowering it into place, and shimming the space between the rear surface and the wall.*

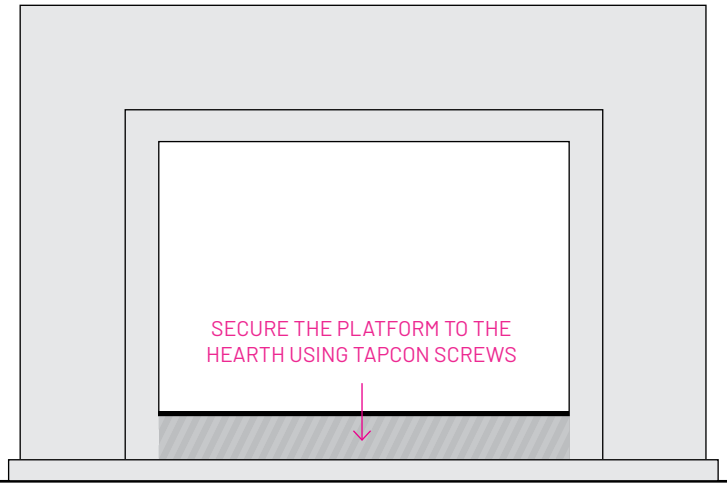

5. Insert the firebox

Lift the firebox and gently guide it into the surround opening. In its proper location, the front surface of the firebox should be flush with the surface of the surround, and centered in the cutout, with a 1/8" gap around the perimeter.

If for any reason the firebox is not plumb with the surround, shim the underside of the firebox until the surfaces align. If the rear of the firebox needs to be shimmed, you will need to pull it out until the rear corners are exposed.

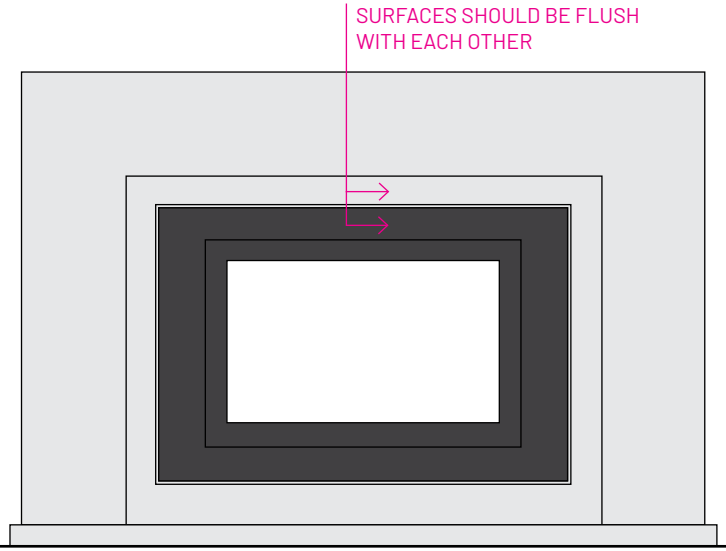

INSTALLATION

For **LINEAR** Fireplaces (models 201, 301 & 302)

6. Secure the firebox

Once the firebox is centered and flush in the cutout, locate the 4 screw holes in the bottom corners of the firebox pan. Drill a pilot hole through each and then secure with 4 screws provided.

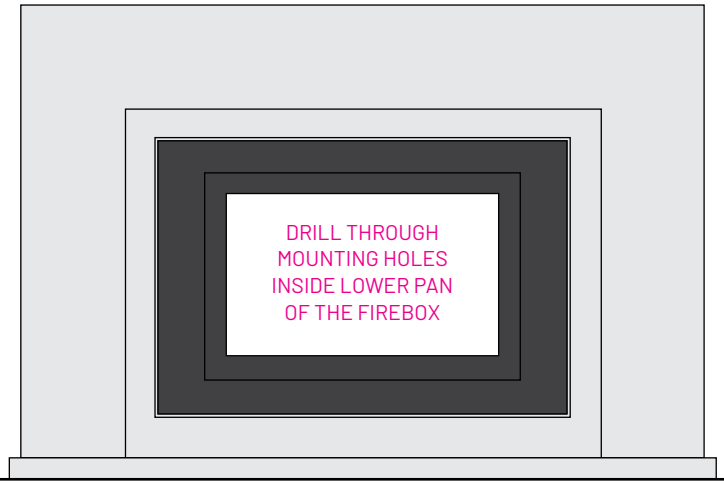

7. Completion

Clean up any pencil lines with a damp towel or rag.

If walls or floors are uneven, you may have gaps between the surround and the wall or between the hearth and floor. Should these gaps be visible, a more seamless appearance can be achieved by either applying caulk or adding trim molding of your choice (e.g., quarter-round). This will depend on the size and visibility of any gaps and is up to the discretion of the installer.

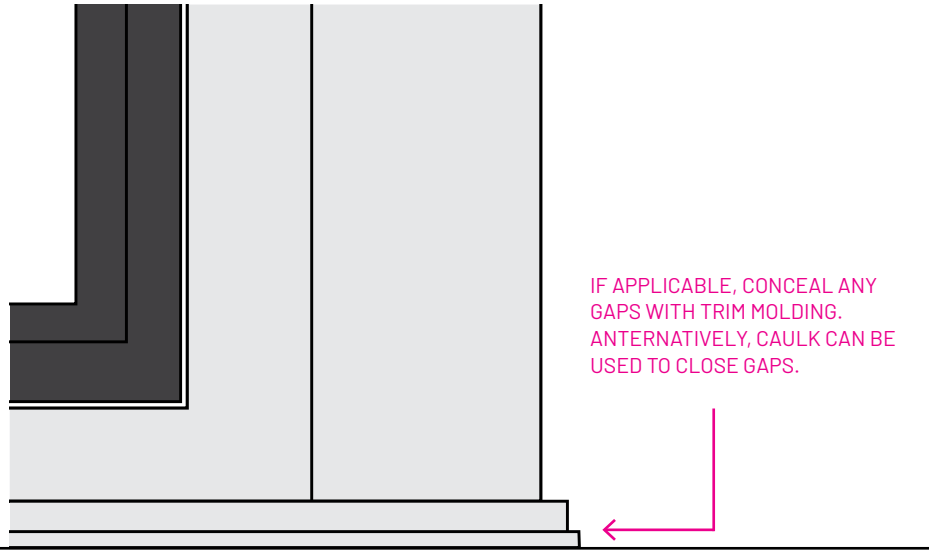

CARE & MAINTENANCE

Here are some tips to keep your concrete fireplace in optimum condition for years to come:

Soot Deposits / Cleaning

Over time and depending on use, the area of the surround directly above the firebox may darken a bit. This is a natural consequence of burning the gels – which eventually forms a thin film of soot. Soot deposits will be more prevalent on surrounds made of lighter-colored concrete. It is best practice to routinely clean the front façade of the surround to prevent any discoloration created by soot. For light cleaning, a damp rag with soapy water should be adequate. For heavier discoloration, a cleaner such as *Simple Green* can be highly effective. Avoid using abrasive cleaners, scoring pads, harsh chemicals (acetone, lacquer thinner) and acidic cleaners as these may damage the sealer.

Damage

While concrete is extremely durable, it is not indestructible. Concrete may chip if a hard object bangs against it. Should your surround get chipped, you can purchase one of Trueform's Chip Repair Kits in the same color as your surround. Alternatively, if you live in the Tri-State area, you can schedule a professional chip repair by Trueform by calling 888.474.7977.

Scratching may occur if hard or sharp objects are dragged over the surface. If scratching does occur, it is most likely impacting the protective sealer and not the concrete itself. Fortunately, our surfaces can be resealed. Should you need the surface to be resealed, you can purchase one of our Sealer Repair Kits. Alternatively, if you live in the Tri-state area, you can schedule a professional resealing with Trueform by calling 888.474.7977.

Questions?

Should you run into any challenges or difficulties installing this system, feel free to reach out to us at 888.474.7977 or makers@trueformconcrete.com and we will do our best to assist you.

Trueform concrete

ABOUT TRUEFORM

Elegant. Natural. Refined. Concrete.

Since our inception in 2006, Trueform Concrete has been serving architects, designers, and homeowners through the fabrication of bespoke concrete objects meant to elevate the spaces they inhabit while celebrating the dynamic nature of the material itself.

Trueform is proud to be a fixture in the **Made in America** movement. Each of our heirloom-quality pieces is handcrafted in New Jersey using only the finest materials and state-of-the-art processes. Our concrete sinks, tables, reception desks, fireplace surrounds and other artifacts have taken up residence in homes, corporate buildings, restaurants, bars, wellness retreats and other locations across the globe.

Whether you are interested in one of our pre-configured concrete surrounds or are seeking something completely unique, we can build it. One of the chief advantages of concrete is the infinite array of design possibilities it affords. Novel colors, shapes and textures is our passion. Our craftsmen would love to personalize your project to match your exact needs.

Trueform Concrete, LLC
105 West Dewey Ave, Bld. E, Suite 509 / Wharton, NJ. 07885
Main Office: 888.474.7977 / Email: makers@trueformconcrete.com
Standard Products: helen@trueformconcrete.com
Custom Products: mike@trueformconcrete.com
www.trueformconcrete.com / Instagram: @trueform_concrete

Trueform concrete