MSI

www.msistone.com

1. **Read enclosed detailed installation instructions before beginning install.**
2. **A flat subfloor is a must!**
3. **Proper moisture testing is a must!**
4. **Proper expansion around all permanent structures is a must!**
5. **Molding, trim, transition, and finish pieces must not prevent the floor from floating.**
6. **Failure to follow installation instructions will void warranty.**
7. **Acclimation is normally not necessary but may be required in extreme circumstances.**

Please Read All Instructions, Carefully, Before You Begin Installation.
Improper Installation Will Void Warranty

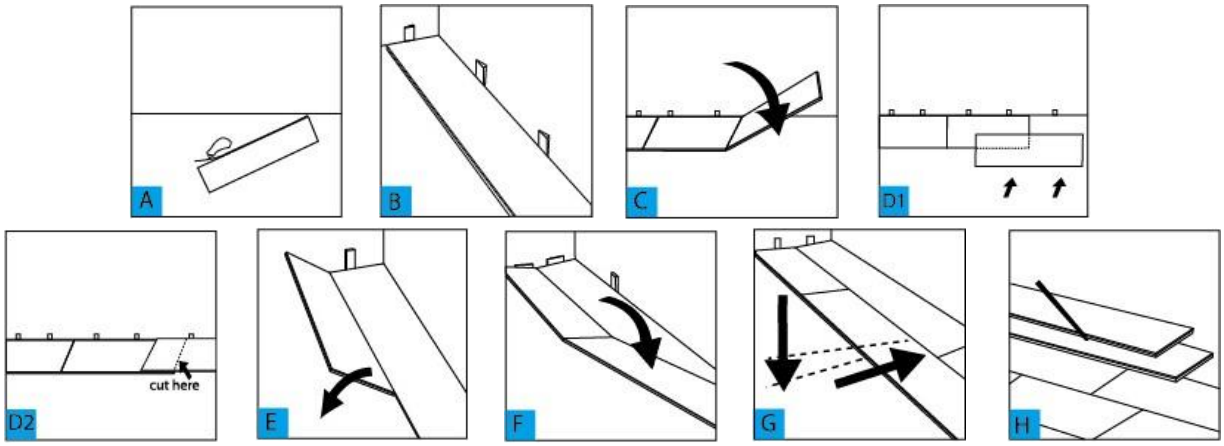

Always check flooring planks for defects such as chips and color variations under good light conditions. Check that grooves are free of debris. **Use planks from multiple boxes** during installation to insure random pattern variation.

The flooring should be stored and installed in a climate controlled area with an average temperature between 55-95° F (12-53^{0}C). If flooring is exposed to temperatures less than 40° F (5° C) or more than 95° F (35° C) for more than one hour, the flooring must be acclimated for a minimum of 12 hours by spreading out the cartons during acclimation but not stacking the cartons. If stacking is necessary, stack the cartons in a crisscross manner - **never stacking** the cartons more than three high.

The area in which the flooring is installed must remain *climate controlled with the temperature between 65°85°F for the life of the product.

**MSI's Everlife SPC flooring may be installed in a vacation home, three-seasons rooms, etc., with a temperature between 55-95^{0}F (12-53^{0}C) at least 48-hours before and during the installation, even if temporary temperature measures must be taken. Thereafter, the temperature cannot fall to below 40^{0}(5^{0}F) or higher than 95 (53^{0}C), and RH must maintain between 35 – 70%. In these installations, you must use transition moldings at doorways and in any span greater than 40' in any direction. The same is true in light commercial installations.*

This product is a floating floor and should NOT be *secured to the floor. Do not install fixed objects, such as cabinets, on top of the flooring or fasten trim/molding/transition pieces directly to the floor.

**You may adhere MSI's Everlife SPC flooring in light commercial and commercial installations using MSI's MS007 adhesive, following directions on the pail.*

Required Tools and Supplies:

- Circular Saw
- Safety Glasses
- ¼" or ½" spacers
- Utility Knife
- Straight Edge Ruler or T-Square
- Pencil
- Tape Measure Underlayment

If existing baseboard molding is difficult to remove, Quarter Round molding will be required to cover the expansion space need between flooring and baseboard.

SUITABLE TYPES OF SUB FLOORS AND FLOOR PREPARATION

The sub floor must be flat, dry, and clean. Carpet staples or any/all adhesive residue must be removed and floor must be clean to ensure proper installation. *If it is uncertain that the old adhesive residue may cause issues, you should use MSI's MS004 Adhesive Encapsulator.*

To check for flatness, hammer a nail into the center of the floor. Tie a string to the nail and push the knot against the floor. Pull the string tight to the farthest corner of the room and examine the floor for any high/lows relative to the string. Subfloor must be flat to 1/8" per 6' (3mm per 0.92 meter). Any areas in excess of the flatness specification must be sanded down or filled with an appropriate leveler.

This product can be installed over most existing floors including wood, non-cushioned vinyl or linoleum, and ceramic/porcelain tile if the existing flooring is intact and properly secured to the subfloor. If installing over ceramic/porcelain tile, grout lines in excess of 1/16" (0.625) must be filled with a Portland based skim coat/floor leveler according to the manufacturer's guidelines.

Warning: This product should not be installed over carpet. Installation over carpet will void the warranty. When installed in rooms with direct sunlight, during the peak hours of sunlight, the use of blinds/shades or drapes is recommended.

This product is waterproof but is not a moisture barrier. The product can withstand topical water and water penetration for up to 16 hours without being damaged. However, water leaking over or around the outer edges of the flooring can damage a wood subfloor and breed mold/mildew growth on subfloor and walls. This is not considered a defect in the flooring.

Moisture arising from new or old concrete can create high levels of moisture vapor emissions, hydrostatic pressure, and high levels of alkalinity. This combination is highly corrosive and will damage the floor over time. To avoid this problem, ensure that concrete subfloors are constructed according to the American Concrete Institution's guidelines (ACI's 302.2 Guide). To check current conditions, a calcium chloride test (ASTM F1869) and a RH test using in situ Probes (ASTM F2170) is necessary. If the level of vapor emissions /

hydrostatic pressure exceeds 6lbs and /or 90% RH, a moisture barrier must be installed over the concrete or you must use MSI's MS007 Adhesive for the install.

Note: New concrete needs to cure for at least 60 days before installing flooring materials.

If considering Radiant heat, only Hydronic radiant heat can be used. The heating components must have a minimum of 3/8" separation from the product. System must be operational for a minimum of two weeks prior to installation. Five days prior to installation, the temperature should be reduced to 65° F (18° C). After installation, the temperature can be raised gradually (5° F per hour) to a maximum operation temperature of 85°F (29° C). An in-floor thermostat is recommended to avoid overheating. A transition strip must be used for any installation longer than 40 linear feet and/or wider than 30 linear feet. It is also suggested to use T-Molding in doorways.

Installation

•Remove the tongue (on the long side) from the first row of planks. This will ensure that the decorative surface of the flooring is under the finished trim when installed. Use a utility knife to score through the tongue several times until it easily snaps off (Figure A).

Note: The first row of planks may need to be trimmed lengthwise for a better fit at the end of the installation. Measure the room and divide by the width of the plank. If there is a remainder of less than 2", the first row will need to be trimmed by that amount.

•Starting in the left hand corner, place the first plank with its trimmed side towards the wall. Use spacers along each wall to maintain an expansion gap of 1/4" (7-8mm) between the wall and the flooring (Figure B).

•Attach the ends of the 1st plank and the second plank by lifting the 2nd plank and inserting the tongue on the short side into the groove of the first plank and lowering it into place. Line up edges and corners carefully (Figure C).

•Continue along the wall until you reach the last full plank, connecting each plank in manner described above. To fit the last plank, turn plank over (face down). Place the plank in the corner so the tongue on the short end touches the adjacent wall. Measure overlap between the installed plank and the last plank (Figure D1 & D2).

•Using a sharp utility knife and a straight edge, score a line on the top surface of the plank. The plank should split on the score line with little effort. Use saw to cut plank to size. The plank should split on the score line with little effort. Use saw to cut plank to size.

Note: the end pieces must be longer than 8". This may require cutting a plank to start a row depending on the size of the room.

•Begin the next row with the cut off piece from the previous row to create the necessary stagger pattern. This piece should be a minimum of 8" (20cm) long and the joint offset from the previous row should be at least 10" (26cm) apart. To attach, tilt the plank you are installing slightly upwards (about 15-25º), insert its tongue into the previous row's groove and lower it into place. The plank will click into place with light pressure (Figure E).

•Install the second plank in the second row by inserting the short end tongue into the previously installed plank's groove. Align the plank so that the long side tongue tip is positioned just over the groove lip of the plank in the first row (Figure F). Working from the end seam, at a low angle, insert the long tongue into the groove of the adjoining plank. Very little force is required to fit the tongue into the groove. You should be able to feel the tongue lock into the groove (Figure G). Continue locking each piece into place, short side first and then long side.

•To fit the last row, lay a plank on top of the previous row. With the plank against the wall, mark a line down the length of the plank and cut the planks accordingly (Figure H).

•Door Frames and heating vents also require expansion room. Cut the planks to the correct length. Place the cut plank next to its actual position, use a ruler to measure the areas to be cut out and mark them. Cut out the marked points allowing the necessary expansion distance on each side. T-molding is suggested in all doorways.

•You can trim doorframes by turning a panel upside down to use as a height guide. Using a handsaw, cut door frames to the necessary height so that planks slide easily under them.

•To finish the perimeter of the room, install quarter round molding using finishing nails. Nail quarter round directly into the baseboard not the flooring.

Maintenance, Tips, and Warnings
MAINTENANCE:

Dust-mop or broom can be used for daily maintenance. When necessary, clean with a MOIST cloth or mop and a neutral PH cleaner – heavy use of detergent cleaners will leave a residue and, over time, lead to a cloudy film.

NEVER USE floor polish or floor cleaning wax, oil soaps, etc. These products can damage and/or leave a film on the flooring. This is not a defect in the floor.

TIPS:

- Always use felt tip protectors on all furniture legs/feet
- Entryway/walk off mats are recommended; **Warning:** Never use rubber protective mats. - Area rugs are recommended
- Keep pet nails trimmed
- Sharp shoe-heels (e.g. high-heels) may dent the floors
- Never slide furniture across a floor without pads
- Keep floors clean

WARRANTIES:

Joint Integrity: During the period of the warranty the Patented locking system will not fail when properly installed and maintained according to manufacturer's instructions. Installed flooring must remain climate controlled with the temperature between 55-95° F (12-53°C) for the life of the product, with the above listed exceptions.

MSI

www.msistone.com

Manufacturing Defect: During the period of the warranty, this product will be free from manufacturing defects.

Water Proof: During the period of the warranty, this product is 100% waterproof and the structural integrity of the floor will not be diminished by exposure to water.

Wear Resistance: During the period of the warranty, this product's wear layer will not wear through to the decorative layer under normal use. Excessive wear due to improper maintenance or care is not a defect in the wear layer or product

What is NOT Covered by this Warranty (item list is not exhaustive)

- Improper Installation: Material installed that is not installed in accordance with Installation Instructions is not a manufacturing related defect. Installer workmanship is not warranted. Labor cost to repair or replace material installed with visible imperfections Improper maintenance, which results in loss of gloss level.
- Damage resulting from use of strong detergents, chemicals, paints, dyes, mats, fertilizers, or other similar materials.
- Damage caused by moving appliances or heavy furniture without protecting the floor. (Always protect floor by using protective covering when moving heavy objects.
- Damage or scratches resulting from accidents, casualty events, abuse or improper usage (including damage from pet claws, teeth, urine etc..). Accidents, abuse and improper usage are defined as, but are not limited to damage caused by: casters on furniture, rotating beater bars on vacuum cleaners, burns, cuts, impact from heavy and sharp objects, narrow or spike heels, cleats, etc., as well as, damage resulting from unprotected furniture legs.
- Damage caused by leaks from appliances or plumbing.
- Construction damage after installation.
- Installation-related errors or damage including improper conditioning of jobsite and flooring materials.
- Fading, discoloration, or other damage due to excessive temperatures or sunlight. Radiant heat must not exceed 85 ° F (29°C) and be approved by the manufacturer for the use of their product with resilient vinyl flooring applications.
- Problems or damage due to excessive moisture or hydrostatic pressure from the sub-floor.
- Discoloration caused by use of latex or rubber-backed floor mats. Note: some synthetic backed carpets contain latex in the manufacturing process that may discolor vinyl. Always use mats marked as "nonstaining."
- Discoloration caused by rubber pads, rubber wheels, rubber tires, rubber rollers, automotive tires, etc.
- Flooring installed on stairs is excluded from warranty coverage. Installation of residential product in a commercial environment.

If the product fails to perform as stated in the warranty, MSI reserves the right to have the product inspected by a certified inspector. Should product be determined to be defective, MSI reserves the right to either repair or replace the defective area with the same color, design and grade product, if available. If product is unavailable or discontinued, MSI reserves the right to select and supply similar material.

- If repairs or replacement of a section is deemed necessary, all items must be cleared from the affected area subsequent to the original installation. The cost associated with the removal of those items will not be credited or reimbursed.
- Product costs will be covered for the length of warranty.
- Labor cost will not be covered
- Warranty coverage for the replacement floor will be limited to the remaining portion of the original warranty.

- Any additional claims for loss of profit or incidental losses due to defective product will not be considered. Some examples of incidental damages are: replacement of subfloors or underlayment, trim moldings, disconnecting / reconnecting appliances, moving of furniture or any other losses deemed incidental by MSI.

Failure to follow these procedures may result in voiding some or all of the warranty. This limited warranty is not transferable and extends only to the original end user.

Please note: Some jurisdictions do not allow exclusion or limitation of incidental or consequential damages or limitations on how long an implied warranty lasts, so the above limitation and exclusion may not apply to you.

This warranty gives you specific rights and you may also have other rights, which vary from state to state.