# ARCHITECTURAL REFERENCE GUIDE

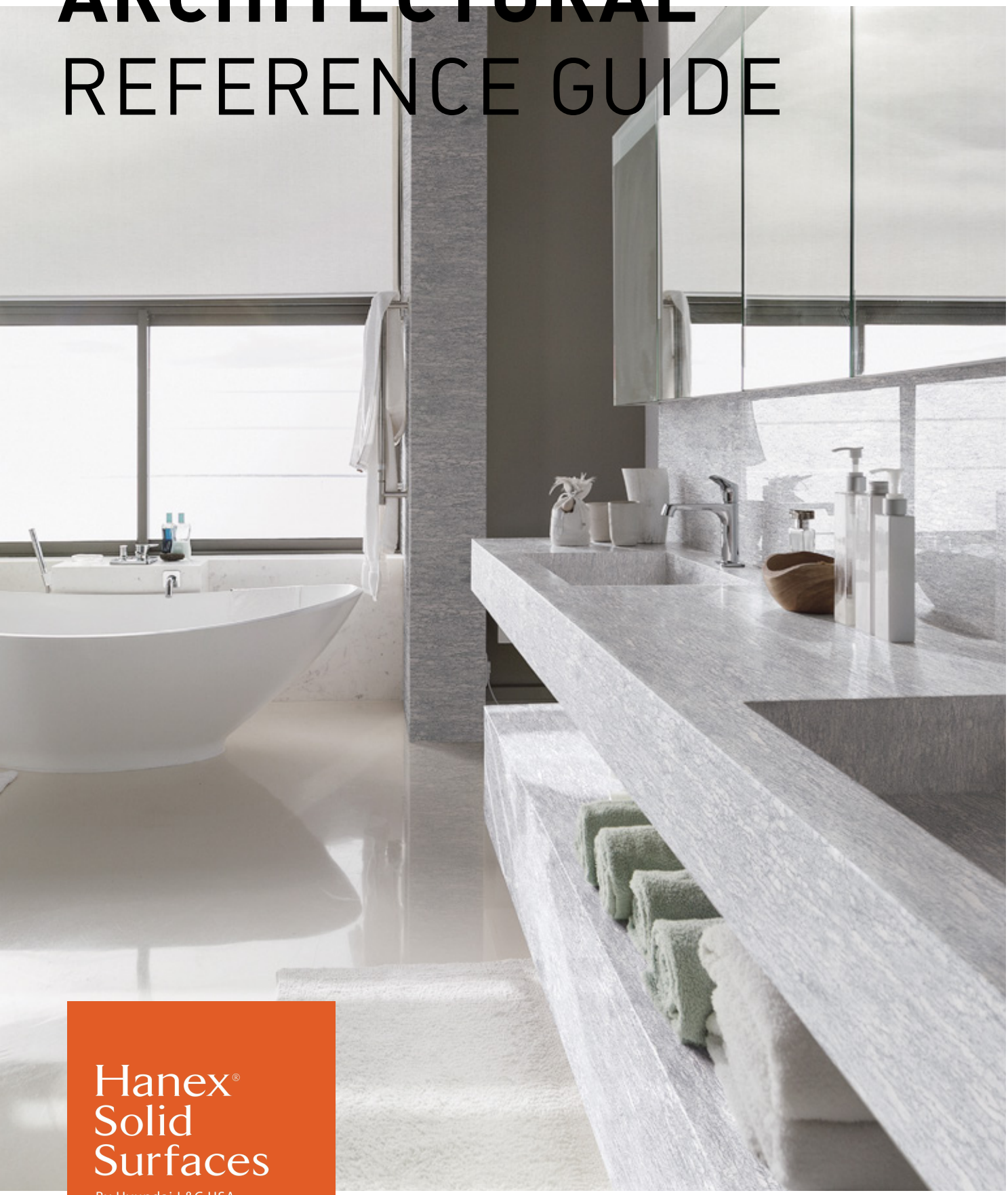

Hanex® Solid Surfaces

By Hyundai L&C USA

# TABLE OF CONTENTS


COMPANY OVERVIEW 3-4

PRODUCT INFORMATION 5-12

Frequently Asked Questions

SPECIFICATIONS 13-30

Solid Surface Countertops

Solid Surface Fabrications

TECHNICAL INFORMATION 31-47

Technical Data Sheet

Performance Testing

Product Safety

CARE & MAINTENANCE 48@H0

WARRANTIES 51-54

Residential Warranty

Commercial Warranty

CONTACT INFORMATION 55-56

## ESTABLISHED

Hyundai Department Store Group: 1971
Hanex Solid Surfaces: 1995

## GLOBAL HEADQUARTERS

Hyundai L&C
7-8F Center One Building,
26 Eulji-ro 5-gil, Jung-gu, Seoul, Korea
Tel: 080.729.8272
www.hyundailnc.com

## NORTH AMERICAN OFFICE

Hyundai L&C USA, LLC
2839 Paces Ferry Rd, Suite 1100
Atlanta, GA 30339
Tel: 888.426.9421
Tel: 770.431.6110
www.hyundailncusa.com

## DISTRIBUTION NETWORK

We have an extensive network of distributors across North America. To locate a distributor in your area, visit our website: hanexsolidsurfaces.com

## CORPORATE OVERVIEW

The North American subsidiary of Hyundai Department Store Group, a South Korea based corporation, Hyundai L&C (Living & Culture) seeks to create a new living interior culture that goes beyond the boundaries of construction materials and interior products to provide new value to people and spaces, fostering deeper human connections and contributing to an abundant world, in harmony with nature.

Hyundai L&C is one of the world's leading manufacturers of premium building materials and an industry leader in the market of Acrylic Solid Surface.

Based on original, high-value technology accumulated over the last half-century, and an innovative business platform, Hyundai L&C goes beyond the boundaries of construction material expertise to be a "Total Living Interior Company."

Hyundai L&C strives to improve the quality of life in all aspects of human society and participates actively to preserve the environment by developing the best solutions through ceaseless technological innovation.

Under the belief that simple imitation achieves nothing, Hyundai L&C's strong global network, excellent human resources, and leading technologies will create the new living culture of the future.

## ABOUT HANEX SOLID SURFACES

Hanex continually pushes the boundaries of what is possible in order to meet the demands of today's diverse applications in homes, schools, healthcare facilities and businesses. Hanex's goal is to enrich the lives of the people who encounter these spaces by understanding what really matters beyond aesthetics alone.

With an exclusive manufacturing process using high-tech equipment and materials, Hanex Solid Surfaces' next-generation products are meticulously crafted to withstand even the most rigorous treatment, making it the ideal material for residential and commercial applications.

Manufactured in Temple, Texas, Hanex's 135,000 square foot facility features the most state-of-the-art production equipment available, with the capacity to produce up to 300,000 sheets of solid surface annually. Additionally, the plant's central location allows Hanex to maximize product availability, proximity to customers and better serve the solid surface market with American-made products.

Hanex also offers solid surface sheets up to 60 inches wide, allowing a much higher degree of flexibility and efficiency in fabrication and installation.

## CONTACT

Toll free: 888.426.9421
E-mail: info@hanexsolidsurfaces.com
Website: hanexsolidsurfaces.com

# PRODUCT INFORMATION

# PRODUCT NAME

Hanex® Solid Surfaces

# PRODUCT DESCRIPTION

Hanex Solid Surfaces is an ideal material for residential and commercial applications because of its beauty, durability, aesthetics, design flexibility, and color choices. Hanex Solid Surfaces products are a nonporous material and NSF 51 Certified for food preparation areas. They can be used in many applications where sanitation is of utmost importance, such as kitchen countertops, hospitals, playrooms, schools and many more. Hanex Solid Surfaces can be fabricated and installed in almost any application with invisible seams. Every Hanex Solid Surface is covered by the best Limited Warranty in the industry. We are backed by a nationwide network of industry experts, authorized repair agents and customer care associates to service your countertop.

# COMPOSITION/MATERIALS

Hanex Solid Surfaces are made with a composition of Methyl Methacrylate (MMA) and Poly Methyl Methacrylate (PMMA) resin filled with Alumina Trihydrate (ATH) and other specialized formats to give them timeless beauty and quality. Hanex Solid Surfaces sheets are made using state of the art DBCU (Double Belt Casting Unit) process to produce superior products.

# PRODUCT CHARACTERISTICS

## THERMAL STABILITY

The resistance without change in color and shape when heat is applied to the material from an outside source, including direct and/or indirect heat source. Hanex Solid Surfaces has been tested and passed the following tests:

- Heat Resistance
- Hot Water Resistance
- Weatherability
- UV Stability
- Flame Resistance

## CHEMICAL RESISTANCE

The resistance to certain acid, alkali and organic solvent without change in color and composition. Hanex Solid Surfaces has been tested under the strictest guidelines.

## MAINTENANCE/REPAIRABILITY

Unlike other surfacing materials which are produced by laminating or coating, Hanex is nonporous and solid through the entire material. These features make Hanex Solid Surfaces virtually maintenance free and fully repairable.

## PRODUCT BENEFITS

- Stain resistant
- Mildew resistant
- Bacteria resistant
- Class A fire rating
- Nonporous
- Hygienic
- Repairable
- Custom design
- Thermoformable
- Custom edge details
- Industry's best warranty
- Design flexibility
- Inconspicuous seams
- Durable
- Renewable

## APPLICATIONS

Hanex Solid Surfaces is an ideal hygienic material for kitchens and baths due to its resistance to heat, moisture, pollutants, bacteria, and other harmful agents. With a wide selection of colors and design applications, Hanex Solid Surfaces can transform any space into a beautiful environment. The unlimited design flexibility of Hanex Solid Surfaces makes it a perfect material for commercial applications. Many commercial builders are using solid surfaces in hospitals, restaurants, hotels, schools, banks, and other areas because of all the advantages a solid surface has to offer.

### RESIDENTIAL USES

- Countertop
- Wall Coverings
- Vanities
- Aprons
- Window Sills
- Thresholds
- Shelves
- Fireplaces
- Bar Tops
- Shower and Bath Surrounds

### COMMERCIAL USES

- Table Tops
- Countertops
- Signs
- Reception Areas
- Transactions Counters
- Name Plates
- Wall Coverings
- Bar Tops
- Window Sills
- Thresholds
- Furniture
- Partitions
- Vanities
- Shelves and Store Fixtures
- Food Service Areas

# COLLECTIONS AND COLORS

## CLASSICS

This collection brings you endless design possibilities with a wide variety of color combinations, textures and hues – inspired by the wonder of nature.

- Solo: Array of solid colors to address clean, traditional designs
- Duo: Arrangement of small particulate colors to provide soft, natural designs
- Trio: Arrangement of large particulate colors to provide natural stone appearance
- Palazzo: Arrangement of unique designs and colors representing innovation and advancement of technology

## BRIONNE

Crisp, clean and pure describes the essence of Brionne. This unique collection features a soft, luminous sheen, and a rich array of patterns and colors.

## BELLASSIMO

Inspired by patterns and colors found in nature, the Bellassimo collection creates a luxurious, sophisticated design appeal – all while being distinctively green.

## BELLASSIMO EPISODE II

The colors and movements within our Bellassimo Ep II Collection fuse versatility with beauty. Shades and structures forged from inspiring conversations with designers like you. Each created to help you give clients a kitchen, space or environment that impacts their everyday lives.

## STRATUM

This set of premium solid surfaces is inspired by the wispy movement and strata patterns within rocks and stones. The collection's timeless colors and styles offer incredible vibrancy, beauty and versatility–each can be effortlessly shaped into almost any form or structure by molding, machining or other appropriate†processing.

## GALLERIA

Invigoratingly inviting. This collection has the ability to bring a space together with speckled beauty that intertwines nature with sleek sophistication. Whether you are looking to create a residential space with soft, elegant hues or modern intrigue in a commercial setting, the Galleria Collection offers the versatility and style to bring any vision to life.

# PRODUCT MEASUREMENTS

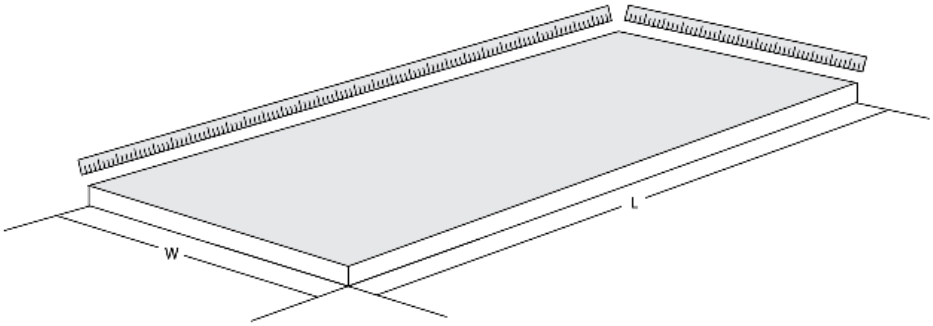


| COLLECTION | THICKNESS INCH/MM | WIDTH INCH/MM | LENGTH INCH/MM | WEIGHT LB/KG |
|---|---|---|---|---|
| Classics (Solo) | 1/2" (12 mm)<br>1/4" (6 mm) | 30" (760 mm) | 144" (3680 mm)<br>98" (2500 mm) | 130.7 lb (62.9 kg)<br>44.0 lb (19.7 kg) |
| Classics (Duo) | 1/2" (12 mm)<br>1/4" (6 mm) | 30" (760 mm) | 144" (3680 mm)<br>98" (2500 mm) | 130.7 lb (62.9 kg)<br>44.0 lb (19.7 kg) |
| Classics (Trio) | 1/2" (12 mm) | 30" (760 mm) | 144" (3680 mm) | 130.7 lb (62.9 kg) |
| Classics (Palazzo) | 1/2" (12 mm) | 30" (760 mm) | 144" (3680 mm) | 130.7 lb (62.9 kg) |
| Brionne | 1/2" (12 mm) | 30" (760 mm) | 144" (3680 mm) | 130.7 lb (62.9 kg) |
| Bellassimo | 1/2" (12 mm) | 30" (760 mm) | 144" (3680 mm) | 130.7 lb (62.9 kg) |
| Bellassimo II | 1/2" (12 mm)<br>1/4" (6 mm) | 30" (760 mm) | 144" (3680 mm)<br>98" (2500 mm) | 130.7 lb (62.9 kg)<br>44.0 lb (19.7 kg) |
| Stratum | 1/2" (12 mm)<br>1/4" (6 mm) | 30" (760 mm) | 144" (3680 mm)<br>98" (2500 mm) | 130.7 lb (62.9 kg)<br>44.0 lb (19.7 kg) |
| Galleria | 1/2" (12 mm)<br>1/4" (6 mm) | 30" (760 mm) | 144" (3680 mm)<br>98" (2500 mm) | 130.7 lb (62.9 kg)<br>44.0 lb (19.7 kg) |

# FREQUENTLY ASKED QUESTIONS

## WHAT IS HANEX SOLID SURFACES?

Hanex is an ideal material for residential and commercial application because of its beauty, durability, aesthetics, design flexibility, color choices and more. Hanex Solid Surfaces are a nonporous material and NSF 51 Certified for food preparation areas. They can be applied in many applications where sanitation is of utmost importance, such as kitchen countertops, hospitals, playrooms, schools and much more.

## WHAT IS HANEX SOLID SURFACES MADE OF?

Hanex is a composition of Methyl Methacrylate (MMA) and Poly Methyl Methacrylate (PMMA) resin filled with Alumina Trihydrate (ATH) and other specialized formula to give them the timeless beauty and quality. We are one of a few to have successfully developed the DBCU (Double Belt Casting Unit) process that produces superior products.

## CAN I RECIEVE SOME HANEX SAMPLES?

Hanex samples are provided to help designers, architects, and customers make the right selection from the vast array of colors and designs. Please visit hanexsolidsurfaces.com or contact our office to order samples.

## IS HANEX SOLID SURFACE REPAIRABLE?

Unlike other surfacing materials, Hanex Solid Surfaces can be repaired to its original condition. Hanex Solid Surfaces is nonporous and solid throughout the entire material. These features make Hanex Solid Surfaces virtually maintenance-free and completely repairable. For details, please see the Care & Maintenance section on hanexsolidsurfaces.com.

## HOW DO I MAINTAIN MY HANEX COUNTERTOP?

Unlike other surfacing materials, Hanex Solid Surfaces is nonporous and solid through the entire material. These features make Hanex virtually maintenance free and repairable. To ensure long-lasting beauty, follow the guidelines to prevent damages and care for your investment. For details, please see the Care & Maintenance section on hanexsolidsurfaces.com.

## ARE THERE DIFFERENT FINISHES IN HANEX SOLID SURFACES?

Hanex Solid Surfaces can be finished to have a matte, semi-gloss and high-gloss finish. Remember, some colors may require more maintenance with a different finish.

# FREQUENTLY ASKED QUESTIONS

## WHAT IS NSF 51?

According to NSF's website, independent testing programs require companies to comply with the strict standards imposed by NSF and its product certification programs. From extensive product testing, material analyses to unannounced plant inspections, NSF is the only third-party testing organization to undertake such a complete evaluation. NSF must inspect every aspect of product's development before it can be certified. NSF 51 is a certification program which specifically concentrates on food preparation areas. NSF imposes the strictest standards to ensure consumer health and safety. We are proud to state that Hanex Solid Surfaces has been tested by NSF, certified, and is currently listed as NSF 51 Certified.

## WHAT ARE THE HEAT-RESISTANT PROPERTIES OF HANEX SOLID SURFACES?

The innate feature of Hanex Solid Surfaces gives it excellent heat resistant property compared to other surfacing materials in the market. However, to prevent any damages from heat, never place hot items directly on Hanex Solid Surfaces. Placing hot pans or heat-generating appliances directly on Hanex Solid Surfaces may cause damages to the countertop. Avoid direct and indirect heat with temperatures over 80°C (170°F). In most cases the damages can be repaired, however to protect the Hanex Solid Surfaces countertop, recommend your customer always use trivets when placing hot items or heat generating appliances.

## WHAT DOES THE WARRANTY COVER?

Hanex Solid Surfaces comes with a Commercial 10-Year Limited Warranty or a Residential Lifetime Limited Warranty, the best in the industry. Due to its inherent properties and its DBCU manufacturing process, Hanex Solid Surface is recognized in the industry for quality.

# FREQUENTLY ASKED QUESTIONS

## WHAT ARE THE ADVANTAGES OF HANEX SOLID SURFACES OVER GRANITE COUNTEROPS?

With the beauty of granite, there are many limitations. If granite is not properly sealed regularly it can easily be stained, harbor bacteria, molds, viruses, and other germs that can be hazardous to your health. Depending on the size of the countertop, granite will have visible seams and other imperfections that may cause problems. There are many benefits of Hanex Solid Surfaces over granite. Most importantly, Hanex is fully repairable and renewable. Unlike granite, Hanex Solid Surfaces comes with a Commercial 10-Year Limited Warranty or Residential Lifetime Limited Warranty.

## WHAT ARE THE ADVANTAGES OF HANEX SOLID SURFACES OVER LAMINATE COUNTEROPS?

Laminates over time will separate due to moisture. Hanex Solid Surfaces is non-porous, solid, and homogenous. The water absorption ratio is among the lowest in the industry. Even after years of daily use, Hanex Solid Surfaces will not soak up moisture. There are many other benefits of Hanex Solid Surfaces over laminates, however. Most importantly, Hanex Solid Surfaces is fully repairable and renewable. Additionally, unlike laminates, Hanex Solid Surfaces comes with a Commercial 10-Year Limited Warranty or a Residential Lifetime Limited Warranty.

## WHAT ARE THE ADVANTAGES OF HANEX SOLID SURFACES OVER TILE COUNTEROPS?

Hanex Solid Surfaces can be fabricated and installed in almost any application with invisible seams, making it truly solid in surfacing materials. Unlike tiles, you don't have to clean or disinfect, and it doesn't harbor bacteria, viruses or germs. There are many other benefits of Hanex Solid Surfaces over tiles, most importantly, they are fully repairable and renewable.

## WHAT ARE THE ADVANTAGES OF HANEX SOLID SURFACES OVER THE OTHER COUNTERTOP MATERIALS LIKE WOOD, CONCRETE, STAINLESS STEEL?

Hanex Solid Surfaces is an ideal hygienic material for kitchens and baths due to its resistance to heat, moisture, pollutants, bacteria, and other harmful agents. With a wide selection of colors and design applications, Hanex Solid Surfaces can transform any space into a beautiful environment. The unlimited design flexibility of Hanex Solid Surfaces makes it a perfect material to use in commercial applications. Many commercial builders are using solid surfaces in hospitals, restaurants, hotels, schools, banks and other areas because of all the advantages solid surface has to offer.

# SPECIFICATIONS

*Spec Note: This product guide specification is written according to the Construction Specifications Institute (CSI) 3-Part Format, including MasterFormat™, SectionFormat™, and PageFormat™, as described in The Project Resource Manual—CSI Manual of Practice, 5th Edition. The section must be carefully reviewed and edited by the Architect to meet the requirements of the project and local building code. Coordinate this section with other specification sections and the drawings. Delete all "Spec Notes" after editing this section. Section numbers are from MasterFormat 1995 Edition, with numbers from MasterFormat 2004 Edition in parentheses. Delete version not required.*

# SECTION 06610 (12 23 61.16)

## SOLID SURFACING COUNTERTOPS

*Spec Note: This section covers Hanex Solid Surfaces countertops. Consult Hanex Solid Surfaces for assistance in editing this section for the specific application.*

## PART 1: GENERAL

### 1.1 Section Includes

A. Acrylic solid surfacing countertops.

*Spec Note: Edit the following list of related sections as required for the project. List other sections with work directly related to this section.*

### 1.2 Related Sections

A. Section 06100 (06 10 00) – Rough Carpentry: Blocking and Supports
B. Section 06615 (06 61 16) – Solid Surfacing Fabrications
C. Section 07920 (07 92 00) – Joint Sealants

### 1.3 References

A. ANSI Z124 – Plastic Fixtures
B. ANSI/ICPA SS-1 – Performance Standard for Solid Surface Materials

*Spec Note: List standards referenced in this section, complete with designations and titles. This article does not require compliance with standards, but is merely a listing of those used.*

C. ANSI/NEMA LD 3 – High Pressure Decorative Laminates
D. ASTM D 256 – Standard Test Methods for Determining the Izod Pendulum Impact Resistance of Plastics
E. ASTM D 570 – Standard Test Method for Water Absorption of Plastics
F. ASTM D 638 – Standard Test Method for Tensile Properties of Plastics
G. ASTM D 696 – Standard Test Method for Coefficient of Linear Thermal Expansion of Plastics Between -30°C and 30°C With a Vitreous Silica Dilatometer
H. ASTM D 785 – Standard Test Method for Rockwell Hardness of Plastics and Electrical Insulating Materials

I. ASTM D 790 – Standard Test Methods for Flexural Properties of Unreinforced and Reinforced Plastics and Electrical Insulating Materials
J. ASTM D 1499 – Standard Practice for Filtered Open-Flame Carbon - Arc Exposures of Plastics
K. ASTM D 2583 – Standard Test Method for Indentation Hardness of Rigid Plastics by Means of a Barcol Impressor

**1.4 Submittals**

A. Comply with Section 01330 (01 33 00) – Submittal Procedures
B. Product Data: Submit manufacturer's product data, including fabrication and installation instructions

*Spec Note: Edit the following paragraph for shop drawings as required for the project.*

C. Shop Drawings: Submit fabricator/installer's shop drawings, including plans, elevations, sections, and details, indicating:

1. Dimensions, tolerances, materials, components, attachments, fabrication, edge treatment, corners, location of seams, overhangs, backsplashes, and inlays.

2. Locations and sizes of cutouts and holes for items to be installed in countertops.

3. Locations and sizes of blocking, supports, and reinforcements to support countertops.

D. Samples: Submit manufacturer's samples of solid surfacing material in each color and finish.
E. Manufacturer's Certification: Submit manufacturer's certification that solid surfacing material and adhesives comply with specified requirements.
F. Fabricator/Installer's Certification: Submit fabricator/installer's certification by manufacturer.
G. Care and Maintenance Instructions: Submit manufacturer's care and maintenance instructions, including cleaning and repairing instructions.
H. Warranty: Submit manufacturer's standard warranty.

**1.5 Quality Assurance**

A. Fabricator/Installer's Qualifications:

1. Fabricator/installer regularly engaged, for preceding 5 years, in fabrication and installation of solid surfacing countertops of similar type to that specified.

2. Employ persons trained for fabrication and installation of solid surfacing countertops.

3. Certified by manufacturer to fabricate and install solid surfacing countertops.

*Spec Note: Edit pre-installation meeting as required for the project. Delete if not required.*

B. Pre-installation Meeting:

1. Schedule pre-installation meeting before start of installation of solid surfacing countertops.

2. Require attendance of parties directly affecting work of this section, including contractor, architect, fabricator/installer, and manufacturer's representative.

3. Review examination, installation, adjusting, cleaning, protection, and coordination with other work.

**1.6 Delivery, Storage and Handling**

A. Delivery:

1. Solid Surfacing Countertops: Deliver solid surfacing countertops to site in accordance with manufacturer's instructions.

2. Adhesives: Deliver adhesives to site in manufacturer's original, unopened containers and packaging, with labels clearly identifying product name and manufacturer.

B. Storage:

1. Solid surfacing countertops: Store vertically in clean, dry area indoors in accordance with manufacturer's instructions.

2. Adhesives:
   a. Store adhesive tubes in upright position.
   b. Store between 50°F and 70°F.

C. Handling:

1. Handle solid surfacing countertops in accordance with manufacturer's instructions.

2. Protect solid surfacing countertops during handling and installation from dirt, stains, cracks, scratches, and other damage.

3. Do not lay, transport, or carry solid surface countertops flat.

4. Do not drop or drag solid surfacing countertops.

**1.7 Warranty**

*Spec Note: Specify warranty period for project. Consult Hanex Solid Surfaces for more information.*

A. Warranty Period: [Commercial 10-Year Limited Warranty] [Residential Lifetime Limited Warranty].

*Spec Note: Edit the following article for extra materials as required for the project. Delete if extra materials are not required.*

### 1.8 Extra Materials

A. Deliver to owner minimum of [2] [ _____ ] square feet of color-match solid surfacing material for each color specified.

## PART 2: PRODUCTS

### 2.1 Manufacturer

A. Hyundai L&C USA, LLC
2839 Paces Ferry Rd, Ste 1100, Atlanta, GA 30339
Phone: 888.426.9421 or 770.431.6110
E-mail: info@hyundailncusa.com

### 2.2 Solid Surfacing Countertops

A. Solid Surfacing Countertops: Hanex Solid Surfaces

1. Conformance: ICPA SS-1
2. Certification: NSF 51 certified for food preparation area
3. Nonporous
4. Homogeneous
5. Solid and uniform throughout material thickness
6. Consistent color throughout material thickness

B. Composition:

1. Resins: Methyl Methacrylate (MMA) and Polymethyl Methacrylate (PMMA)
2. Filler: Alumina Trihydrate
3. Additives

C. Physical Properties:

1. Unit Weight: 1.8 g/cm3
2. Tensile Strength, ASTM D 638: 5,400 psi
3. Tensile Modulus, ASTM D 638: 1.4 x 106 psi
4. Elongation, ASTM D 638: 0.42% minimum
5. Flexural Strength, ASTM D 790: 9,200 psi
6. Flexural Modulus, ASTM D 790: 1.34 x 105 psi
7. Rockwell Hardness, ASTM D 785: 92.

8. Thermal Expansion, ASTM D 696: 3.04 x 10-5 in./in./∞C

9. Gloss (60∞ Gardner), ANSI Z124: 5 to 75

10. Color Stability, NEMA LD 3: No change

11. Wear and Cleanability, ANSI Z124: Passes

12. Boiling Water Surface Resistance, NEMA LD 3: No change

13. High-Temperature Resistance, NEMA LD 3: No change

14. Stain Resistance, NEMA LD 3: Passes

15. Impact Resistance, NEMA LD 3: No fracture

16. IZOD Impact Strength, ASTM D 256: 0.28 foot-pounds/inch

17. Water Absorption Weight, ASTM D 570: 0.03% maximum

18. Fungi and Bacteria, ANSI Z124: No attack

19. Weatherability, ASTM D 1499: No change

20. Listed, NSF 51: All colors

D. Thickness: 1/2"

*Spec Note: Specify solid surfacing countertop color. Consult Hanex Solid Surfaces for available colors.*

E. Color: _____ .

1. Solid surfacing countertops of same color from same production batch

*Spec Note: Specify solid surfacing countertop finish. Consult Hanex Solid Surfaces for description of finishes.*

F. Finish: [Matte] [Semi-Gloss] [Gloss].

1. Uniform finish on exposed surfaces

*Spec Note: Specify solid surfacing countertop edge treatment here or on the drawings. Consult Hanex Solid Surfaces for description of edge treatments.*

G. Edge Treatment: [ _____ ] [As indicated on the drawings].

*Spec Note: Specify solid surfacing countertop backsplashes here or on the drawings. Consult Hanex Solid Surfaces for description of backsplashes. Delete if backsplashes are not required.*

H. Backsplashes: [ _____ ][As indicated on the drawings].

1. Color: Same color from same production batch as countertops

*Spec Note: Specify solid surfacing countertop inlays here or on the drawings. Consult Hanex Solid Surfaces for description of inlays. Delete if inlays are not required.*

I. Inlays: [ _____ ] [As indicated on the drawings].

**2.3 Accessories**

A. Adhesives: "Hanex Adhesive"

1. Description: Two-component, solid surfacing adhesive.

a. Working Time: 8 to 12 minutes at 72°F
b. Full Cure: 12 hours at 72°F
c. 100% reactive
d. Translucent
e. Readily accepts pigments for color matching
f. UV stable
g. Sandable
h. Phthalate free
i. Non yellowing
j. Stain resistant
k. Water penetration resistant, including boiling water

2. Physical Properties, Cured Adhesive:

a. Tensile Strength, ASTM D 638: 3,850 psi
b. Tensile Elongation: 6.9%
c. Flexural Strength, ASTM D 790: 5,800 psi
d. Impact Strength, NEMA LD 3: 4.6 foot-pounds
e. Water Absorption, ASTM D 570: 0.26%
f. Water Resistance, ICPA SS-1: 250 cycles
g. Barcol Hardness, ASTM D 2583: 34/42

3. Color: Compatible with solid surfacing countertop color

B. Joint Sealants

1. 100% silicone.

2. Compatible with solid surfacing countertops.

3. As specified in Section 07920 (07 92 00).

**2.4 Fabrication**

A. Shop Assembly

1. Fabricate solid surfacing countertops in accordance with manufacturer's instructions.

2. Fabricate solid surfacing countertops to greatest extent practical in shop.

B. Seams:

1. Locate and fabricate seams in accordance with manufacturer's instructions.

2. Do not locate seams through cooktop cutouts.

3. Use manufacturer's adhesives.

4. Fabricate seams to be inconspicuous.

### 2.5 Source Quality Control

A. Visual Inspection of Solid Surfacing Countertops: Do not install solid surfacing countertops that do not pass visual inspection at fabricator/installer's shop.

1. Warping: Less than 1/6" per 10' of material

2. Foreign Particles: Less than 3 visible particles per sheet

3. Color Match: Same lot

4. White Spots: Less than 3 visible particles per sheet

5. Discoloration: None

6. Particle Distribution: Even distribution

7. Pit Holes: None

8. Uneven Sanding: None

9. Hairline Cracks: None

10. Concave: None

## PART 3: EXECUTION

### 3.1 Examination

A. Examine areas to receive solid surfacing countertops.

B. Verify surfaces to support solid surfacing countertops are clean, dry, flat, level, plumb, stable, rigid, and capable of handling the weight.

C. Notify Architect of conditions that would adversely affect installation or subsequent use.

D. Do not begin installation until unacceptable conditions are corrected.

### 3.2 Installation

A. Install solid surfacing countertops in accordance with manufacturer's instructions at locations indicated on the drawings.

B. Acclimate solid surfacing countertops to room temperature before installation.

C. Install solid surfacing countertops level, plumb, square, true to line, and without warp.

D. Install solid surfacing countertops securely in place with proper support at perimeter, seams, cutouts, overhangs, and other locations as required.

E. Install solid surfacing countertops with 1/8" gap for every 10' of material when surface is enclosed between 2 walls or other obstructions.

F. Ensure seams are inconspicuous.

G. Sand and polish solid surfacing countertops in accordance with manufacturer's instructions to specified finish and to remove scratches.

H. Ensure solid surfacing countertop installation is color matched.

I. Do not install mechanical fasteners directly into solid surfacing countertops.

J. Install joint sealants as specified in Section 07920 (07 92 00).

### 3.3 Adjusting

A. Repair minor damages to finish in accordance with manufacturer's instructions and as approved by Architect.

B. Remove and replace damaged solid surfacing countertops that cannot be successfully repaired, as determined by Architect.

### 3.4 Cleaning

A. Clean solid surfacing countertops promptly after installation in accordance with manufacturer's instructions.

B. Do not use harsh cleaning materials or methods that could damage finish.

### 3.5 Protection

A. Protect installed solid surfacing countertops from dirt, stains, scratches, and damage during construction.

B. Do not use installed solid surfacing countertops as work surfaces during construction.

*Spec Note: This product guide specification is written according to the Construction Specifications Institute (CSI) 3-Part Format, including MasterFormat™, SectionFormat™, and PageFormat™, as described in the Project Resource Manual—CSI Manual of Practice, Fifth Edition. The section must be carefully reviewed and edited by the Architect to meet the requirements of the project and local building code. Coordinate this section with other specification sections and the drawings. Delete all "Spec Notes" after editing this section. Section numbers are from MasterFormat 1995 Edition, with numbers from MasterFormat 2004 Edition in parentheses. Delete version not required.*

# SECTION 06610 (06 61 16)

## SOLID SURFACING FABRICATIONS

*Spec Note: This section covers Hanex Solid Surfaces fabrications. Consult Hanex Solid Surfaces for assistance in editing this section for the specific application.*

## PART 1: GENERAL

### 1.1 Section Includes

A. Acrylic Solid Surfacing Fabrications:

*Spec Note: List types of solid surfacing fabrications to be specified in this section. Edit the following list as required.*

1. Wall coverings
2. Wainscoting
3. Partitions
4. Shower surrounds
5. Tub surrounds
6. Aprons
7. Window sills
8. Door sills
9. Thresholds
10. Signs
11. Name plates
12. Furniture
13. Shelves
14. _____
15. _____
16. _____

### 1.2 Related Sections

*Spec Note: Edit the following list of related sections as required for the project. List other sections with work directly related to this section.*

A. Section 06100 (06 10 00) – Rough Carpentry: Blocking and Supports

B. Section 06610 (12 36 61.16) – Solid Surfacing Countertops

## 1.3 References

*Spec Note: List standards referenced in this section, complete with designations and titles. This article does not require compliance with standards, but is merely a listing of those used.*

A. ANSI Z124 – Plastic Fixtures

B. ANSI/ICPA SS-1 – Performance Standard for Solid Surface Materials

C. ANSI/NEMA LD 3 – High Pressure Decorative Laminates

D. ASTM D 256 – Standard Test Methods for Determining the Izod Pendulum Impact Resistance of Plastics

E. ASTM D 570 – Standard Test Method for Water Absorption of Plastics

F. ASTM D 638 – Standard Test Method for Tensile Properties of Plastics

G. ASTM D 696 – Standard Test Method for Coefficient of Linear Thermal Expansion of Plastics Between -30°C and 30°C With a Vitreous Silica Dilatometer

H. ASTM D 785 – Standard Test Method for Rockwell Hardness of Plastics and Electrical Insulating Materials

I. ASTM D 790 – Standard Test Methods for Flexural Properties of Unreinforced and Reinforced Plastics and Electrical Insulating Materials

J. ASTM D 1499 – Standard Practice for Filtered Open-Flame Carbon-Arc Exposures of Plastics

K. ASTM D 2583 – Standard Test Method for Indentation Hardness of Rigid Plastics by Means of a Barcol Impressor

L. NSF 51 – Food Equipment Materials

## 1.4 Submittals

A. Comply with Section 01330 (01 33 00) – Submittal Procedures

B. Product Data: Submit manufacturer's product data, including fabrication and installation instructions

*Spec Note: Edit the following paragraph for shop drawings as required for the project.*

C. Shop Drawings: Submit fabricator/installer's shop drawings, including plans, elevations, sections, and details, indicating:

1. Dimensions, tolerances, materials, components, attachments, fabrication, edge treatment, corners, location of seams, overhangs, and inlays.

2. Locations and sizes of cutouts and holes for items to be installed in fabrications.

3. Locations and sizes of blocking, supports, and reinforcements to support fabrications.

D. Samples: Submit manufacturer's samples of solid surfacing material in each color and finish.

E. Manufacturer's Certification: Submit manufacturer's certification that solid surfacing material and adhesives comply with specified requirements.

F. Fabricator/Installer's Certification: Submit fabricator/installer's certification by manufacturer.

G. Care and Maintenance Instructions: Submit manufacturer's care and maintenance instructions, including cleaning and repairing instructions.

H. Warranty: Submit manufacturer's standard warranty.

**1.5 Quality Assurance**

A. Fabricator/Installer's Qualifications:

1. Fabricator/installer regularly engaged, for preceding 5 years, in fabrication and installation ofsolid surfacing fabrications of similar type to that specified.

2. Employ persons trained for fabrication and installation of solid surfacing fabrications.

3. Certified by manufacturer to fabricate and install solid surfacing fabrications.

*Spec Note: Edit pre-installation meeting as required for the project. Delete if not required.*

B. Pre-installation Meeting:

1. Schedule pre-installation meeting before start of installation of solid surfacing fabrications.

2. Require attendance of parties directly affecting work of this section, including Contractor, Architect, fabricator/installer, and manufacturer's representative.

3. Review examination, installation, adjusting, cleaning, protection, and coordination with other work.

## 1.6 Delivery, Storage and Handling

A. Delivery:

1. Solid Surfacing Fabrications: Deliver solid surfacing fabrications to site in accordance with manufacturer's instructions.

2. Adhesives: Deliver adhesives to site in manufacturer's original, unopened containers and packaging, with labels clearly identifying product name and manufacturer.

B. Storage:

1. Solid Surfacing Fabrications: Store vertically in clean, dry area indoors in accordance with manufacturer's instructions.

2. Adhesives:
   a. Store adhesive tubes in upright position.
   b. Store between 50°F and 70°F.

C. Handling:

1. Handle solid surfacing fabrications in accordance with manufacturer's instructions.

2. Protect solid surfacing fabrications during handling and installation from dirt, stains, cracks, scratches, and other damage.

3. Do not lay, transport or carry solid surfacing fabrications flat.

4. Do not drop or drag solid surfacing fabrications.

## 1.7 Warranty

*Spec Note: Specify warranty period. Consult Hanex Solid Surfaces for more information.*

A. Warranty Period: [Commercial 10-Year Limited Warranty] [Residential Lifetime Limited Warranty].

*Spec Note: Edit the following article for extra materials as required for the project. Delete if extra materials are not required.*

## 1.8 Extra Materials

A. Deliver to owner minimum of [2] [___] Sq. Ft. of color-match solid surfacing material for each color specified.

# PART 2: PRODUCTS

## 2.1 Manufacturer

A. Hyundai L&C USA, LLC
2839 Paces Ferry Rd SE, Ste 1100 Atlanta, GA 30339
Phone: 888.426.9421 or 770.431.6110
E-mail: info@hyundailncusa.com

## 2.2 Solid Surfacing Fabrications

A. Solid Surfacing Fabrications: Hanex Solid Surfaces

1. Conformance: ICPA SS-1
2. Certification: NSF 51 certified for food preparation area
3. Non porous
4. Homogeneous
5. Solid and uniform throughout material thickness
6. Consistent color throughout material thickness

B. Composition:

1. Resins: Methyl Methacrylate (MMA) and Polymethyl Methacrylate (PMMA)
2. Filler: Alumina Trihydrate
3. Additives

C. Physical Properties:

1. Unit Weight: 1.8 g/cm3
2. Tensile Strength, ASTM D 638: 5,400 psi
3. Tensile Modulus, ASTM D 638: 1.4 x 106 psi
4. Elongation, ASTM D 638: 0.42% minimum
5. Flexural Strength, ASTM D 790: 9,200 psi
6. Flexural Modulus, ASTM D 790: 1.34 x 105 psi
7. Rockwell Hardness, ASTM D 785: 92
8. Thermal Expansion, ASTM D 696: 3.04 x 10-5 in./in./°C
9. Gloss (60∞ Gardner), ANSI Z124: 5 to 75
10. Color Stability, NEMA LD 3: No change
11. Wear and Cleanability, ANSI Z124: Passes

12. Boiling Water Surface Resistance, NEMA LD 3: No change

13. High-Temperature Resistance, NEMA LD 3: No change

14. Stain Resistance, NEMA LD 3: Passes

15. Impact Resistance, NEMA LD 3: No fracture

16. IZOD Impact Strength, ASTM D 256: 0.28 foot-pounds/inch

17. Water Absorption Weight, ASTM D 570: 0.03% maximum

18. Fungi and Bacteria, ANSI Z124: No attack

19. Weatherability, ASTM D 1499: No change

20. Listed, NSF 51: All colors

*Spec Note: Specify solid surfacing fabrication thickness.*

D. Thickness:

1. Vertical Applications: 1/4"

2. Horizontal Applications: 1/2"

*Spec Note: Specify solid surfacing fabrication color. Consult Hanex Solid Surfaces for available colors.*

E. Color: _____ .

1. Solid surfacing fabrications of same color from same production batch.

*Spec Note: Specify solid surfacing fabrication finish. Consult Hanex Solid Surfaces for description of finishes.*

F. Finish: [Matte] [Semi-gloss] [Gloss]

1. Uniform finish on exposed surfaces

*Spec Note: Specify solid surfacing fabrication edge treatment here or on the drawings. Consult Hanex Solid Surfaces for description of edge treatments.*

G. Edge Treatment: [ _____ ][As indicated on the drawings].

*Spec Note: Specify solid surfacing fabrication inlays here or on the drawings. Consult Hanex Solid Surfaces for description of inlays. Delete if inlays are not required.*

H. Inlays: [ _____ ][As indicated on the drawings].

## 2.3 Accessories

A. Adhesives: "Hanex Adhesive"

1. Description: Two-component, solid surfacing adhesive
   a. Working Time: 8 to 12 minutes at 72°F
   b. Full Cure: 12 hours at 72°F
   c. 100% reactive
   d. Translucent
   e. Readily accepts pigments for color matching
   f. UV stable
   g. Sandable
   h. Phthalate free
   i. Non-yellowing
   j. Stain resistant
   k. Water penetration resistant, including boiling water

2. Physical Properties, Cured Adhesive:
   a. Tensile Strength, ASTM D 638: 3,850 psi
   b. Tensile Elongation: 6.9%
   c. Flexural Strength, ASTM D 790: 5,800 psi
   d. Impact Strength, NEMA LD 3: 4.6 foot-pounds
   e. Water Absorption, ASTM D 570: 0.26%
   f. Water Resistance, ICPA SS-1: 250 cycles
   g. Barcol Hardness, ASTM D 2583: 34/42

3. Color: Compatible with solid surfacing fabrications color

B. Joint Sealants:

1. 100% silicone

2. Compatible with solid surfacing fabrications

3. As specified in Section 07920 (07 92 00)

## 2.4 Fabrication

A. Shop Assembly:

1. Fabricate solid surfacing fabrications in accordance with manufacturer's instructions.

2. Fabricate solid surfacing fabrications to greatest extent practical in shop.

B. Seams:

1. Locate and fabricate seams in accordance with manufacturer's instructions.

2. Use manufacturer's adhesives.

3. Fabricate seams to be inconspicuous.

### 2.5 Source Quality Control

A. Visual Inspection of Solid Surfacing Fabrications: Do not install solid surfacing fabrications that do not pass visual inspection at Fabricator/Installer's shop.

1. Warping: Less than 1/6" per 10' of material

2. Foreign Particles: Less than 3 visible particles per sheet

3. Color Match: Same lot

4. White Spots: Less than 3 visible particles per sheet

5. Discoloration: None

6. Particle Distribution: Even distribution

7. Pit Holes: None

8. Uneven Sanding: None

9. Hairline Cracks: None

10. Concave: None

## PART 3: EXECUTIONS

### 3.1 Examination

A. Examine areas to receive solid surfacing fabrications.

B. Verify surfaces to support solid surfacing fabrications are clean, dry, flat, level, plumb, stable, rigid, and capable of handling the weight.

C. Notify Architect of conditions that would adversely affect installation or subsequent use.

D. Do not begin installation until unacceptable conditions are corrected.

### 3.2 Installation

A. Install solid surfacing fabrications in accordance with manufacturer's instructions at locations indicated on the drawings.

B. Acclimate solid surfacing fabrications to room temperature before installation.

C. Install solid surfacing fabrications level, plumb, square, true to line, and without warp.

D. Install solid surfacing fabrications securely in place with proper support at perimeter, seams, cutouts, overhangs, and other locations as required.

E. Install solid surfacing fabrications with 1/8" gap for every 10' of material when surface is enclosed between 2 walls or other obstructions.

F. Ensure seams are inconspicuous.

G. Sand and polish solid surfacing fabrications in accordance with manufacturer's instructions to specified finish and to remove scratches.

H. Ensure solid surfacing fabrication installation is color matched.

I. Do not install mechanical fasteners directly into solid surfacing fabrications.

J. Install joint sealants as specified in Section 07920 (07 92 00).

### 3.3 Adjusting

A. Repair minor damages to finish in accordance with manufacturer's instructions and as approved by architect.

B. Remove and replace damaged solid surfacing fabrications that cannot be successfully repaired, as determined by Architect.

### 3.4 Cleaning

A. Clean solid surfacing fabrications promptly after installation in accordance with manufacturer's instructions.

B. Do not use harsh cleaning materials or methods that could damage finish.

### 3.5 Protection

A. Protect installed solid surfacing fabrications from dirt, stains, cracks, scratches, and other damage during construction.

B. Do not use installed solid surfacing fabrications as work surfaces during construction.

# TECHNICAL INFO

# BASIC COMPOSITION

Hanex Solid Surfaces are made with a composition of Methyl Methacrylate (MMA) and Poly Methyl Methacrylate (PMMA) resin filled with Alumina Trihydrate and other specialized formula to give them the timeless beauty and quality. Hanex Solid Surfaces is one of only two companies to have successfully developed the DBCU (Double Belt Casting Unit) process to produce superior products.

| MATERIAL NAME | COMPONENT |
|---|---|
| MMA (METHYL METHACRYLATE) | RESIN |
| PMMA (POLYMETHYL METHACRYLATE) | RESIN |
| AL (OH) 3-ALUMINA TRIHYDRATE | FILLER |
| CROSS LINKING AGENTS, STABILIZERS, CURING AGENTS, PIGMENTS, ETC. | ADDITIVES |

# TECHNICAL DATA SHEET

| PROPERTIES | UNIT | RESULT | TEST STANDARD |
|---|---|---|---|
| Specifc Gravity | $g/cm^3$ | 1.8 | |
| Tensile Strength | psi | 5,400 | ASTM D 638 |
| Tensile Modulus | psi | $1.4x10^6$ | ASTM D 638 |
| Elongation | %min | 0.42 | ASTM D 638 |
| Flexural Strength | psi | 9,200 | ASTM D 790 |
| Flexural Modulus | psi | $1.38x10^5$ | ASTM D 790 |
| Hardness (Rockwell) | | 92 | ASTM D 785 |
| Thermal Expansion | mm/mc | $3.04x10^{-5}$ | ASTM D 785 |
| Gloss (60 Gardner) | | 5-20 | ANSI Z124 |
| Color Stability | | No Change | NEMA LD3 |
| Wear & Cleanability | | Passes | NEMA LD3 |
| Boiling Water Surface Resistance | | No Change | NEMA LD3 |
| High Temperature Resistance | | No Change | NEMA LD3 |
| Stain Resistance | | Passes | NEMA LD3 |
| Impact Resistance | | No Fracture | NEMA LD3 |
| IZOD Impact Strength | ft.lbs/in | 0.28 | ASTEM D256 |
| Water Absorption Weight | % max | 0.03 | ASTEM D570 |
| Fungi & Bacteria | | No Attack | ASTEM Z124 |
| Wetherability | | No Change | ASTM D 1499 |
| NSF 51 | Listed | All Colors | NSF |

# FUNGAL RESISTANCE TEST

## TEST METHOD:

ASTM G 21 (Determining Resistance of Synthetic Polymeric Material to Fungi)

- Test Organism

  Aspergillus Niger (ATCC 9642)
  Chaetomium Globosum (ATCC 6205)
  Penicillium Pinophilum (ATCC 11797)
  Gliocladium Virens (ATCC 9645)
  Aureobasidium Pullulans (ATCC 15233)

- Rating in Accordance to ASTM G 21

| RATING | GROWTH RATIO |
|---|---|
| 0 | NONE (NO GROWTH) |
| 1 | TRACE OF GROWTH (LESS THAN 10%) |
| 2 | LIGHT GROWTH (10%-30%) |
| 3 | MEDIUM GROWTH (30% - 60%) |
| 4 | HEAVY GROWTH (60%- |

## TEST RESULT:

Zero traces of growth

| CULTURE TIME | WEEK 1 | WEEK 2 | WEEK 3 |
|---|---|---|---|
| Result | 0 | 0 | 0 |

# FLAMMABILITY

## TEST METHOD:

ASTM Designation E 84-01 (Standard Method of Test for Surface Burning Characteristics of Building Materials)

The test procedure is comparable to UL 723, ANSI/NFPA No. 255, and UBC No. 8-1.

Sample Presentation:
- The sample materials were submitted in six pieces 24" wide by 48" long.

The test was conducted in three different thickness:
- (6 mm = 1/4")
- (9 mm = 3/8")
- (12 mm = 1/2")

Sample Conditioning:
- Prior to testing, the sample pieces were placed in the conditioning room (maintained at 73.4 +/- 5°F and relative humidity of 50 +/- 5%) for a period of no less than 28 days and no more than 33 days.

Rating (Building Codes Cited):
- National Fire Protection Association, ANSI/NFPA No. 101, "Life Safety Code"

- Uniform Building Code, Interior Finishes, Sections 801-807

| NFPA | UBC | FLAME SPREAD | SMOKE DEVELOPMENT |
|---|---|---|---|
| CLASS A | CLASS 1 | 0-25 | 0-450 |
| CLASS B | CLASS 2 | 25-72 | 0-450 |
| CLASS C | CLASS 3 | 76-200 | 0-450 |

## TEST RESULT:

Because of the possible variations in reproducibility, the results are adjusted to the nearest figure divisible by 5. In order to obtain the Flame Spread Classification, the Test Result should be compared to the NFPA Class and UBC Class listed on Page 44.

| THICKNESS | FLAME SPREAD | SMOKE DENSITY | RATING |
|---|---|---|---|
| 6MM(1/4") | CLASS 1 | 0-25 | CLASS A / CLASS 1 |
| 9MM (3/8") | CLASS 2 | 25-72 | CLASS A / CLASS 1 |
| 12MM (1/2") | CLASS 3 | 76-200 | CLASS A / CLASS 1 |

## REFERENCE TABLE:

| ITEM | FLAME SPREAD | SMOKE DEVELOPMENT |
|---|---|---|
| GYPSUM | 15 | 0 |
| ACOUSTIC TILES | 25 | 10 |
| INTERIOR WALL COVERING | 25 | 15 |
| LAMINATES (PLASTIC) | 70 | 35 |
| FIBERGLASS REINFORCED PANELS | 70 | 500+ |
| HARDBOARD | 150 | 400 |
| WOOD PARTICLE BOARD | 1155 | 200 |

# CHEMICAL AND STAIN PERFORMANCE REPORT

## TEST METHOD:

- The chemical and stain reagents were applied to the surface and exposed to the sample of Hanex Solid Surfaces for 16 hours.
- The stained samples were then cleaned with a household cleanser and wet scrubbing pads.
- The stained samples were covered with a glass plate for adequate coverage.

| CLASSIFICATION | % | GRITTY CLEANER OR WATER | SCOTCH BRITE™ OR SAND PAPER |
|---|---|---|---|
| ACETIC ACID | 5 | ✔ | |
| ACETIC ACID | 10 | ✔ | |
| ACETIC ACID | 90 | | ✔ |
| ACETIC ACID | 98 | | ✔ |
| ACETONE | | ✔ | |
| AQUA REGIA | | | ✔ |
| AMMONIA | 10 | ✔ | |
| AMMONIUM HYDROXIDE | 5 | ✔ | |
| AMMONIUM HYDROXIDE | 28 | ✔ | |
| BENZENE | | ✔ | |
| CALCIUM THIOCYANATE | 78 | ✔ | |
| CHLORIC HYDROXIDE | 20 | | ✔ |
| CHLOROFORM | 100 | | ✔ |
| CITRIC ACID | 10 | ✔ | |
| DIMETHYL FORMAHIDE | | ✔ | |

| CLASSIFICATION | % | GRITTY CLEANER OR WATER | SCOTCH BRITE™ OR SAND PAPER |
|---|---|---|---|
| ETHANOL | 95 | ✔ | |
| ETHYL ETHER | | ✔ | |
| FORMIC ACID | 88 | | ✔ |
| FORMALDAHYDE | | ✔ | |
| FURFURAL | | | |
| GASOLINE | | ✔ | |
| HYDROCHLORID ACID | 10 | ✔ | |
| HYDROCHLORIC ACID | 20 | ✔ | |
| HYDROCHLORIC ACID | 37 | ✔ | |
| ISOPROPYL ALCHOHOL | | ✔ | |
| KEROSENE | 20 | ✔ | |
| METHYL ALCOHOL | 5 | ✔ | |
| METHYL ETHYL KETONE | | ✔ | |
| MINERAL OIL | | ✔ | |
| NITRIC ACID | 10 | | ✔ |
| NITRIC ACID | 30 | | ✔ |
| NITRIC ACID | 40 | | ✔ |
| NITRIC ACID | 70 | | ✔ |
| PHENOL | 40 | | ✔ |
| PHENOL | 85 | | ✔ |
| PHOSPHORIC ACID | 25 | | ✔ |
| PHOSPHORIC ACID | 85 | | ✔ |
| SILVER NITRATE | 10 | ✔ | |
| SODIUM HYDROXIDE | 10 | ✔ | |
| SODIUM HYDROXIDE | 25 | ✔ | |
| SODIUM HYDROXIDE | 40 | ✔ | |

| CLASSIFICATION | % | GRITTY CLEANER OR WATER | SCOTCH BRITE™ OR SAND PAPER |
|---|---|---|---|
| SODIUM HYPOCHLORITE | | ✔ | |
| SODIUM SULPHATE | | ✔ | |
| SULPHURIC ACID | | ✔ | |
| SULPHURIC ACID | | ✔ | |
| SULPHURIC ACID | | | ✔ |
| SULPHURIC ACID | | | ✔ |
| TOLUENE | | | ✔ |
| XYLENE | | ✔ | |
| ZINC CHLORIDE | | ✔ | |

## SUPPLEMENTARY NOTES:

- For exposures to chemicals other than above, it is recommended to test on a sample piece of Hanex Solid Surfaces to confirm suitability for application.
- Some chemical reagents may damage the surface more seriously and will require expert repair or replacement.
- Common domestic residues, such as the examples listed below, can be removed with water and household cleaners.

| | | | |
|---|---|---|---|
| -Alcohol | -Cigarette Stain | -Cooking Oil | -Curry Powder |
| -Hair Dyes | -Lipsticks | -Mustard | -Pencil Lead |
| -Shoe Polish | -Sugar | -Tomato Sauce | -Wine |
| -Ink | -Coffee | -Crayon | -Make Up |
| -Juices | -Lotions | -Nail Polish | -Salt |
| -Soy Sauce | -Tea | -Vinegar | -Food Dyes |

# HIGH-TEMPERATURE RESISTANCE

## TEST METHOD:

ANSI/NEMA LD 3-2000, Section 3.6

Sample Preparation:

- All samples were prepared by sanding the surface as in an actual installation.

  Step 1: Sanded with 100 micron grit, three passes over substrate

  Step 2: Sand with 60 micron grit, three passes over substrate

  Step 3: Sand with maroon Scotch Brite™ pad, 2 passes over substrate

  Step 4: Sand with gray Scotch Brite™ pad, 2 passes over substrate

Sample Conditioning:

- Prior to testing, the sample pieces were placed in the conditioning room (maintained at 74 +\- 5°F and relative humidity of 53%+\-5%) for a period no less than 48 hours.

Test Procedure:

- A heating vessel was filled 2/3 full of paraffin wax and heated to 365°F and then allowed to cool to 356°F. The vessel was then placed on the sample for 20 minutes, then removed. A visual examination was then performed 24 hours after the removal of the vessel. Viewing was performed at a distance of approximately 30" - 36" and an angle of approximately 45° to 75° from the table surface. The samples were rotated on the same plane and viewed from all directions.

## TEST RESULT:

From four samples that were tested, three sample pieces had no effect (no change in color or surface finish). One sample did have a slight effect (change in color of surface finish that is only visible at certain angles of direction). Standard repair techniques were used to correct any discoloration.

*Scotch Brite™ is a trademark of 3M Company, USA

# COLOR FASTNESS AND AGING

## TEST METHOD:

ANSI/ICPA SS-12001, ASTM D 2565 and NEMA LD 3-2000

Sample Preparation:

- Three 2" x 5" along with one additional sample was retained for control sample.

- All samples were prepared by sanding the surface as in an actual installation.

  Step 1: Sanded with 100 micron grit, three passes over substrate

  Step 2: Sand with 60 micron grit, three passes over substrate

  Step 3: Sand with maroon Scotch Brite™ pad, 2 passes over substrate

  Step 4: Sand with gray Scotch Brite™ pad, 2 passes over substrate

Sample Conditioning:

- Prior to testing, the sample pieces were placed in the conditioning room (maintained at 74 +\- 5°F and relative humidity of 53%+\-5%) for a period no less than 48 hours.

Test Procedure:

- The samples were placed into a Xenon Arc test chamber for 200 hours. The black panel temperature was 145°F and the irradiance set to 0.35W/m2 @ 340nm. At the completion of the test, the control sample was visually compared to the tested samples and performed at a distance of approximately 30" - 36" and an angle of approximately 45° to 75° from the table surface. The samples were rotated on the same plane and viewed from all directions.

## TEST RESULT:

From four samples that were tested, three sample pieces had no effect (no change in color or surface finish). One sample did have slight effect (change in color of surface finish that is only visible at certain angles of direction). Standard repair techniques were used to correct any discoloration.

*Scotch Brite™ is a trademark of 3M Company, USA

# THERMOFORMING

Among the many benefits of Hanex Solid Surfaces over other surfacing materials, the ability to thermoform allows unlimited design possibilities. To achieve the proper result, right oven calibration, minimum radius and accurate mold preparation are important.

## RECOMMENDED MINIMUM RADIUS DEPENDING ON THICKNESS AND COLOR GROUP:

| SHEET THICKNESS | MAXIMUM INSIDE RADIUS | MATERIAL GRADE |
|---|---|---|
| 1/4" Material | 1" Radius | Solo, Duo |
| 1/2" Material | 3" Radius | Solo, Duo |
| 1/2" Material | 5" Radius | Trio |
| 1/2" Material | 7" Radius | Pallazzo |

## RECOMMENDED HEAT AND DURATION DEPENDING ON THICKNESS:

| SHEET THICKNESS | OVEN TEMPERATURE | TIME |
|---|---|---|
| 1/4" Material | 150°C (302∞F) | 30-60 min |
| | 175°C (347∞F) | 15-30 min |
| 1/2" Material | 150°C (302∞F) | 45-80 min |
| | 175°C (347∞F) | 25-60 min |

## PRODUCT NAME

Hanex® Solid Surfaces
Hanex is a registered trademark of Hyundai L&C USA.

## MANUFACTURER/SUPPLIER

Hyundai L&C
7-8F Center One Building,
26 Eulji-ro 5-gil, Jung-gu, Seoul, Korea
Tel: 080.729.8272
www.hyundailnc.com

## CONTACT FOR PRODUCT INFORMATION OR EMERGENCY

Hanex Solid Surfaces
2839 Paces Ferry Rd, Suite 1100
Atlanta, GA 30339
Tel: 888.426.9421
Tel: 770.431.6110

## COMPOSITION/INFORMATION ON INGREDIENTS

| COMPONENT | CASE # | % BY WEIGHT |
|---|---|---|
| Polymethyl Methacrylate | 8011-14-7 | >30 |
| Almina Trihydrate | 21645-51-2 | <70 |
| Methyl Methacrylate (Degradation Product) | 80-62-6 <1 | <1 |

## ACCIDENTAL RELEASE MEASURES

### SAFEGUARD (PERSONNEL)

- Use appropriate personal protective during clean up.

**Note: Review Fire-Fighting Measures and Handling (Personnel) sections before proceeding with clean-up.*

### SPILL CLEAN-UP

- Recover undamaged and minimally contaminated material for reuse and reclamation.

# FIRE FIGHTING MEASURES AND EXPLOSION HAZARD

## FLAMMABLE PROPERTIES

- Hanex Solid Surfaces can be combusted only with difficulty.
- Hazardous gases/vapor produced in fire are carbon monoxide, methyl methacrylate, aldehydes.

## EXTINGUISHING MEDIA

- Water, Dry Chemical, $CO_2$

## FIRE-FIGHTING INSTRUCTIONS

- Keep personnel removed and upwind of fire.
- Wear self-contained breathing apparatus.

# HANDLING AND STORAGE

## HANDLING (PERSONNEL)

- Avoid breathing dust.
- Avoid breathing fumes generated during sawing, routing or drilling.

## HANDLING (PHYSICAL ASPECTS)

- Avoid dust generation.

## STORAGE

- Store in a cool place.

# EXPOSURE CONTROLS AND PERSONAL PROTECTION

## ENGINEERING CONTROLS (VENTILATION)

- Use ventilation that is adequate to keep employee exposure to airborne concentration below exposure limits.

## PERSONAL PROTECTION

- Protective equipment: Eye/Face protection
- Wear safety glasses during operations such as sawing, sanding, drilling or routing.

# TOXICOLOGICAL INFORMATION

## SKIN/EYE IRRITANT

**Polymethyl Methacrylate**

- The compound is not a skin or eye irritant and is not a skin sensitizer in animals. Single or repeated ingestion produced mild degenerative changes of liver and kidney.

**Methyl Methacrylate**

- The compound is a skin irritant, is a moderate eye irritant and is a skin sensitizer in animals.

**Alumina Trihydratelate**

- The compound is untested for skin and eye irritant and is untested for animal sensitization.

**Acute Toxicity (LC50):**

- Polymethyl Methacrylate:.....→2MG/1, 4hr LC50 (Inhalation/Rat)
- Methyl Methacrylate:.....7093PPM/4 hr LC50 (Inhalation/Rat)

**Acute Toxicity (LD50):**

- Polymethyl Methacrylate:.....→2000mg/kg, 4hr LD50 (Oral/Cat)
- Methyl Methacrylate:.....7900PPM/4 hr LD50 (Oral/Cat)

# ECOLOGICAL INFORMATION

- Biodegradation: No information available
- Bioaccumulation: No information available
- Aquatic Toxicity: No information available

# DISPOSAL CONSIDERATIONS

- Dispose in accordance with federal, state and local regulation.
- The owner of the material is responsible for proper waste disposal.

## OTHER INFORMATION

- The data in this Material Safety Data Sheet relates only to the specific material designated herein and does not relate to use in combination with any other material or in any process.

- Responsibility for MSDS: Hanex Solid Surfaces products.

- This information is based on technical information deemed reliable and is subject to revision as additional information is made available.

## COMPONENTS MATERIAL

- Methyl Methacrylate (MMA)
- Polymethyl Methacrylate (PMMA)
- Unsaturated Polyseter Resin (UPR)
- Aluminum Trihydrate (AL-OH3)

Materials are not known to contain toxic materials under Title III and Reauthorization Act of 1986 and 40 CFR part 372.

## HAZARDS IDENTIFICATION

- Xacrylon Solid Surface is not hazardous in its original state but fabricating procedures may generate dust at a high degree, which might result in release of MMA vapor that could cause irritation to the eye, nose and throat areas and skin rash. Inhalation of MMA vapor may cause nausea, shortness ofbreath, coughing, lung irritation, increased blood pressure and abnormal testing of kidney functions.

- Persons with lung disease may have adverse affects when exposed to dust of MMA.

- There are no known carcinogens in this material at levels in excess of 0.1%, as listed by OSHA or IARC.

## FIRST AID MEASURES

- Inhalation: No specific action required. If any irritation occurs, consult a physician.

- Eye Contact: Flush eyes immediately with ample amounts of fresh water for at least 20 minutes.

- Ingestion: Although the material is unlikely to be hazardous after ingestion, consult a physician.

## FIRE FIGHTING MEASURES

Pursuant to NEMA LD3, Xacrylon is highly resistant to flame, but if exposed to extremely high temperatures it may be combusted. Hazardous gases released in fire are methyl methacrylate, carbon monoxide and aldehydes. Agents for extinguishing are water, dry chemical and carbon dioxide. Instructions for fire-fighting are to keep personnel upwind and to wear self-contained breathing equipment.

## STORAGE AND HANDLING

- Avoid breathing dust or creating dust.
- Work areas should be clean, dry and well ventilated.
- Work gloves, work shoes and protective eye goggles should be worn.
- A protective face dust mask should be used over nose and mouth when engaging power tools.
- Avoid breathing fumes as a result of fabrication.
- Store in a dry and cool place.

## PHYSICAL AND CHEMICAL PROPERTIES

- 0% Volatiles
- Insoluble in water
- Form: Sheets
- Specific Gravity: 1.8 g/cm3

## CHEMICAL STABILITY

- Stable at normal temperatures and storage.
- Decomposition at 572°F. Release of MMA.
- Will not polymerize.

## WASTE DISPOSAL

- Incineration or use of landfill.

## REGULATORY INFO

- No known substances to cause cancer, birth defects or other reproductive injury.

# CARE & MAINTENANCE

Unlike other surfacing materials which are produced by laminating or coating, Hanex Solid Surfaces are non-porous and solid throughout the entire material. These features make Hanex Solid Surfaces virtually maintenance-free and repairable. To ensure long-lasting beauty, follow these guidelines to prevent damages and to take care of your investment.

## EVERYDAY CLEANING

- Wipe clean with a damp cloth or sponge.
- Basic stains: Clean with mild detergents or general purpose cleaners.
- Periodically go over surface with a mild abrasive cleanser or wet white Scotch Brite™ pad to maintain a uniform appearance.

## HEAT DAMAGE

The innate feature of Hanex Solid Surfaces gives it excellent heat-resistant properties compared to other surfacing materials in the market. However, to prevent any damages from heat, never place hot items directly on the countertop. Remember, placing hot pans or heat-generating appliances directly on Hanex Solid Surfaces may cause damage to your countertop. Avoid direct and indirect heat with temperatures over 80°C (170°F).

## CHEMICAL DAMAGES

Avoid contact with strong chemicals that can cause damage to your surface such as oven cleaners, acetone, paint removers and others. If exposed, promptly flush with water. Remember, prolonged contact with harsh chemicals can cause serious damage to your Hanex Solid Surfaces.

## SIMPLE STEPS TO AVOID DAMAGE

- Avoid cutting directly on Hanex Solid Surfaces, use a cutting board.
- Never place hot pans directly on the countertop. Even though Hanex Solid Surfaces can withstand temperatures up to 350°F, prolonged or extreme heat could cause permanent damage.
- Strong acids, such as those found in drain cleaners should be flushed with water immediately. Some of these items, when left on the surface may cause whitening, which can be difficult to remove.

## REMOVING PERSISTENT STAINS

- To remove persistent stains, cigarette burns or scratches: Scrub with an abrasive cleanser and green Scotch Brite™ pad.

- Deep scratches can be removed by carefully sanding lightly with 120 grit sandpaper, followed by 220 grit and finishing with 320 grit sandpaper Complete by rubbing the surface with a wet green Scotch Brite™ pad in a circular motion to restore the finish.

*Note: Different methods can be used depending on the finish.*

- For deep scratches and/or damages which may require expert repair, please contact your Authorized Hanex Solid Surfaces Repair Agent or Certified Hanex Solid Surfaces Fabricator.

# WARRANTIES

# RESIDENTIAL LIFETIME LIMITED WARRANTY FOR NORTH AMERICA

Hyundai Living & Creative (hereunder "Hyundai L&C") warrants to the original purchaser/owner in the U.S. and Canada that its product Hanex Solid Surfaces, shall be free from manufacturing defects in material under normal use and service. Hyundai L&C, at its discretion, will repair or replace product failures only due to manufacturing defects.

This Lifetime Limited Warranty is available only to the original owner(s) of the residence in which Hanex Solid Surfaces has been originally installed. The Lifetime Limited Warranty is non transferrable and applies to Hanex Solid Surfaces product only, for interior, residential application(s) in North America. This warranty is void unless the product has been paid for in full, and the product must be registered on or before 30 days of installation.

Under this Lifetime Limited Warranty, Hyundai L&C's authorized agents must be permitted sufficient time and opportunity to inspect the Product(s), evaluate and respond to any claim. All decisions regarding the existence of manufacturing defects or affecting this warranty shall be made by Hyundai L&C and shall be final and binding upon all parties.

The professional fabricator/installer is responsible to inspect the Hanex Solid Surfaces material before fabricating and/or installing the Hanex Solid Surfaces product. It is also the end user's responsibility to inspect the finished product before permanent installation. This warranty does not cover any defects that were visible at the time of fabrication/installation and were not avoided during fabrication/installation. All parties must agree to comply with the terms and conditions outlined in this Lifetime Limited Warranty.

This Lifetime Limited Warranty applies to product(s) that was installed after January 1, 2010.

## EXCLUSIONS FOR HANEX SOLID SURFACES LIFETIME LIMITED WARRANTY:

1. Any residence where the original purchaser is not the occupant.
2. Materials and/or services that have not been paid in full.
3. Failure to comply with Hyundai L&C's recommended storage, handling, fabrication and installation and Care & Maintenance guidelines.
4. Damage caused by accidents, abuse, and/or misuse.
5. Acts of Mother Nature.
6. Improper workmanship of fabrication and/or installation.
7. Exposure to extreme heat; a trivet is always recommend for the use of your Hanex Solid Surfaces.
8. Installed Hanex Solid Surfaces product that is removed from their original place of installation or alteration/repairperformed on product by one other than Certified Hanex Solid Surfaces fabricator/installer.

9. Product(s) installed in any outdoor application.

10. Color variation from samples.

11. Failure caused by inadequate support or structural movement.

12. Exposure to harsh or corrosive chemicals and cleaners.

13. Excessive weight placed on Hanex Solid Surfaces.

14. Appearance of edges, joints or seams due to improper fabrication installation. Appearance of grout and/or caulk is not covered under warranty.

15. Supplemental repairs including, but not limited to, plumbing modifications, electrical, tile, cabinetry, flooring, backsplashes, etc. that may be necessary to repair or replace the Hanex Solid Surfaces under this warranty.

16. Minor conditions such as scratches, stains, water spots, and burns, which may be corrected by Hanex Solid Surfaces Care & Maintenance instructions/guidelines.

When choosing a color, please refer to samples only as a general indication of a particular color's design pattern, aesthetics, and hue. Samples are not guaranteed to be an exact replica of Hanex Solid Surfaces sheets and may vary from the actual, installed Hanex Solid Surfaces.

No other warranties express or implied, are made, including merchantability or fitness for a particular purpose. Except as provided herein, Hyundai L&C is not liable in tort or contract for any loss of direct, incidental, or consequential damages as a result of the use or the inability to use Hanex Solid Surfaces. This warranty gives you specific legal rights, and you may also have other rights, which vary from state to state, or in Canada, from province to province. Some states/provinces do not allow the exclusion or limitation of implied warranties or of incidental or consequential damages, so the above limitation or exclusion may not apply to you.

Hyundai L&C makes no other guarantee, representation, or warranty (express or implied) with respect to its products, except as expressly stated herein. No one other than Hyundai L&C is authorized or permitted to make or provide any promise, representation or warranty with respect to Hanex Solid Surfaces.

To register, as an alternative to online registration noted above, or make a claim under this warranty, please contact your original dealer and/or fabricator/installer. For other assistance, contact:

Hyundai L&C USA, LLC.
2389 Paces Ferry Road, Suite 1100
Atlanta, GA 30339
Toll Free: 888.426.9421 or 770.431.6110

# COMMERCIAL 10-YEAR LIMITED WARRANTY FOR NORTH AMERICA

Hyundai Living & Creative (hereunder "Hyundai L&C") warrants to the original purchaser or owner in the U.S. and Canada that its product Hanex Solid Surfaces, when fabricated and installed by Certified Hanex Solid Surfaces fabricator/installer for commercial use, shall be free from defect in material, under normal use and service, for ten (10) years from the date of sale to the original purchaser. Hyundai L&C, at its discretion, will provide Hanex Solid Surfaces material only, free of charge, for product failures due to manufacture defect during the 10 years following initial installation. The commercial warranty is not transferable.

## EXCLUSIONS FOR HANEX SOLID SURFACES LIFETIME LIMITED WARRANTY:

1. Failure to comply with Hyundai L&C's recommended storage, handling, fabrication and installation, and Care & Maintenance guidelines.

2. Damage caused by accidents, abuse, misuse, fabrication/installation error, exposure to extreme heat, or act of nature.

3. Installed Hanex Solid Surfaces product that is removed from their original place of installation or alteration/repair performed on product by one other than Certified Hanex Solid Surfaces fabricator/installer.

4. Appearance of joints or seams due to improper fabrication/installation or improper grout or caulk due to improper maintenance.

5. Minor conditions such as scratches, stains, water spots, and burns, which may be corrected by Hanex Care & Maintenance instructions/ guidelines.

No other warranties, express or implied, are made, including merchantability or fitness for a particular purpose. Except as provided herein, Hyundai L&C is not liable for any loss of direct, incidental, or consequential damages as a result of the inability to use Hanex Solid Surfaces. This warranty gives you specific legal rights, and you may also have other rights, which vary from state to state. Some states do not allow the exclusion or limitation of implied warranties or of incidental or consequential damages, so the above limitation or exclusion may not apply to you.

To register or make a claim under this warranty, contact your original dealer or fabricator/installer or for further assistance, contact:

Hyundai L&C USA, LLC.
2389 Paces Ferry Road, Suite 1100
Atlanta, GA 30339
Toll Free: 888.426.9421 or 770.431.6110

# CONTACT INFORMATION

## GLOBAL HEADQUARTERS

Hyundai L&C
7-8F Center One Building,
26 Eulji-ro 5-gil, Jung-gu, Seoul, Korea
Tel: 080.729.8272
www.hyundailnc.com

## NORTH AMERICAN OFFICE

Hyundai L&C USA, LLC
2839 Paces Ferry Rd, Suite 1100
Atlanta, GA 30339
Tel: 888.426.9421
Tel: 770.431.6110
www.hyundailncusa.com

## HANEX SOLID SURFACES ONLINE

E-mail: info@hanexsolidsurfaces.com
Website: hanexsolidsurfaces.com